IPC Integrated Professional Cleaning

IPC Gansow

Spare Parts List

IPC EAGLE

Ref: LPTB02379

Model: CLEANTIME 70 BT 70 ECS

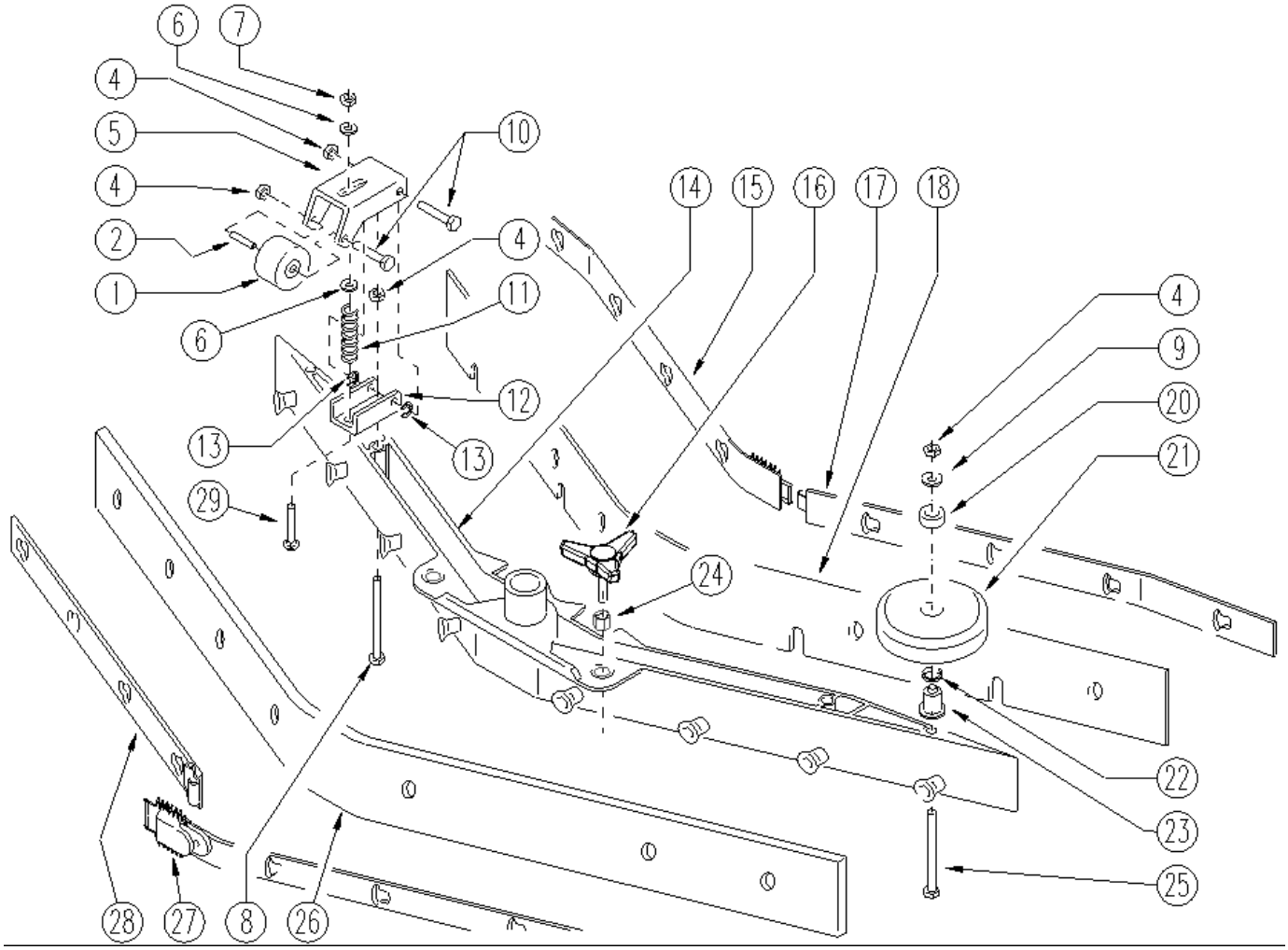

Ref.	K	Part N.	Customer Part N.	Description	Qty	Validity: From	To	Price
0001		RTRT49413		WHEEL D. 60-D.15 X36 NYL.	2,00			--
0002		LAFN04041		SPACER D6/15	2,00			--
0004		VTDD01694		NUT M6 INOX	8,00			--
0005		LAFN05559		SUPPORT RUOTINO	2,00			--
0006		VTRS13947		WASHER D. 8 INX UNI 6592	4,00			--
0007		VTDD01695		NUT M 8 INX	2,00			--
0008		VTVT15142		SCREW TE M 6x45 INOX	2,00			--
0009		VTRS00245		WASHER D.6 UNI 6592 INOX	2,00			--
0010		VTVT15515		SCREW TE M 6X 50 INOX A2	4,00			--
0011		MLML49422		SPRING D.15X 45 X1	2,00			--
0012		LAFN51069		BRACKET SUPP.RUOTINO SQUEEGEE	2,00			--
0013		VTAE45707	#8479.90.9498	CIRCLIP D. 6 UNI 7434 INOX	4,00			--
0014		KTRI02049		BODY SQUEEGEE PRESSOFUSO "L"	1,00			--
0015		LAFN51047		LAMINATION BLOCCA LAMA ANTER.SX "L"	1,00			--
0016		MPVR05265		KNOB 8X25	2,00			--
0017		LAFN51046		LAMINATION BLOCCA LAMA ANTER.DX "L"	1,00			--
0018		MPVR48380		RUBBER BLADE LAV. 890	1,00			--
0020		MPVR49229		BUSHING SHK	2,00			--
0021		MPVR05290		ROLLER PARACOLPI	2,00			--
0022		GUGO00164		GASKET	2,00			--
0023		LAFN04100		SPACER PER RUOTINO PARACOLPI	2,00			--
0024		VTVR00022		INSERT FILETTATO ESAGONALE M8	2,00			--
0025		VTVT00841		SCREW TE M 6X65 UNI 5739 INX	2,00			--
0026		MPVR48379		RUBBER BLADE LAV. 890 PARA	1,00			--
0027		LAFN05675		BLADE HOLDER POSTERIORE DX (L)	1,00			--
0028		LAFN05674		BLADE HOLDER POSTERIORE SX (L)	1,00			--
0029		VTVT01304		SCREW M 8X 40 TTQST UNI 5731	2,00			--

Table: TRACTION MOTOR

Progressive Number: 1

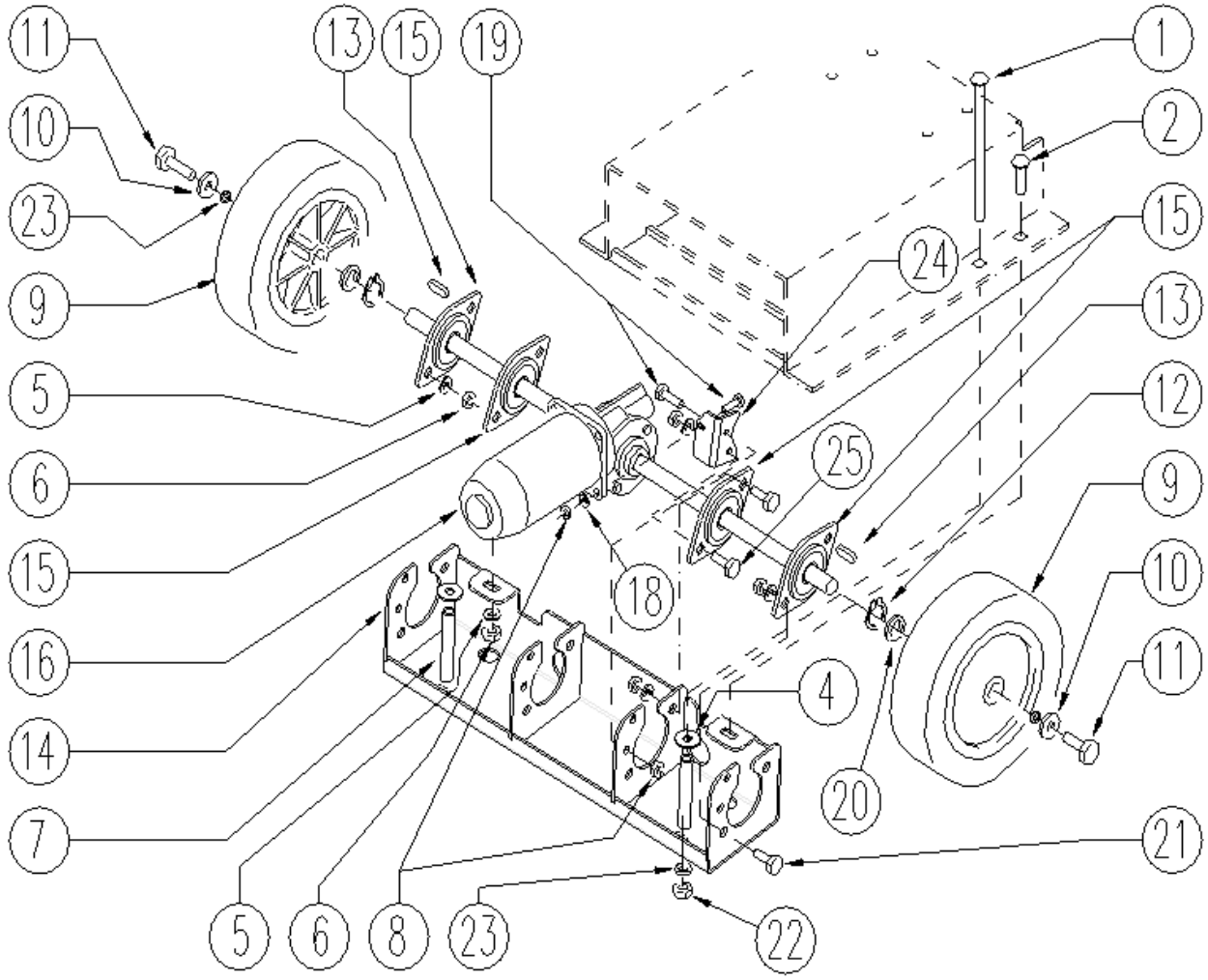

Ref.	K	Part N.	Customer Part N.	Description	Qty	Validity: From	To	Price
0001		VTVT01140		SCREW TTTQS M8-100	2,00			--
0002		VTVT00842		SCREW	2,00			--
0004		VTRS13946		WASHER D. 8 X24 INX UNI 6593	2,00			--
0005		VTRS13947		WASHER D. 8 INX UNI 6592	10,00			--
0006		VTDD01695		NUT M 8 INX	10,00			--
0007		LAFN04155		SPACER ASSE LEVA MOLLA PRESS.	2,00			--
0008		VTDD01694		NUT M6 INOX	2,00			--
0009		RTRT00521		WHEEL -	2,00	12/2008	01/2010	--
0009		RTRT00524		WHEEL -	2,00	01/2010	05/2010	--
0009		RTRT00529		WHEEL D200	2,00	05/2010		--
0009		RTRT36352		WHEEL D.200 DRW	2,00		12/2008	--
0010		VTRS13946		WASHER D. 8 X24 INX UNI 6593	2,00			--
0011		VTVT15916		SCREW TE M 8X 16 UNI 5739 A2	2,00			--
0012		VTAE06193		CIRCLIP D. 20 UNI 7435	2,00			--
0013		VTVR33668		KEY 6x 6x40 UNI 6604A	2,00			--
0014		LAFN07418		SUPPORT MOTORE	1,00			--
0015		CUVR00105		SUPPORT	4,00			--
0016		MEVR01070		CARBON	2,00			--
0016		MOCC00301		MOTOR AOMPDIF 24V 165W 130G	1,00		09/2007	--
0016		MOCC00335		MOTOR 180W	1,00	09/2007	07/2008	--
0016		MOCC00347		MOTOR 180W	1,00	07/2008		--
0018		VTRS00245		WASHER D.6 UNI 6592 INOX	2,00			--
0019		VTVT13939		SCREW TE 6X20 UNI5739 INX	2,00			--
0020		VTRS00032		THICKNESS 20,2X28X1 DIN 988	2,00		12/2008	--
0021		VTVT13938		SCREW TE 8X20 UNI5739 INX	7,00			--
0022		VTDD15521		NUT M 8 INX A2 UNI 5588	2,00			--
0023		VTRS15146		WASHER D. 8 INX GRW UNI 1751	4,00			--
0024		LAFN06873		BRACKET -	1,00			--
0025		VTVT15907		SCREW TE 8X25 UNI5739 INX	1,00			--

Table: TRACTION MOTOR

Progressive Number: 1

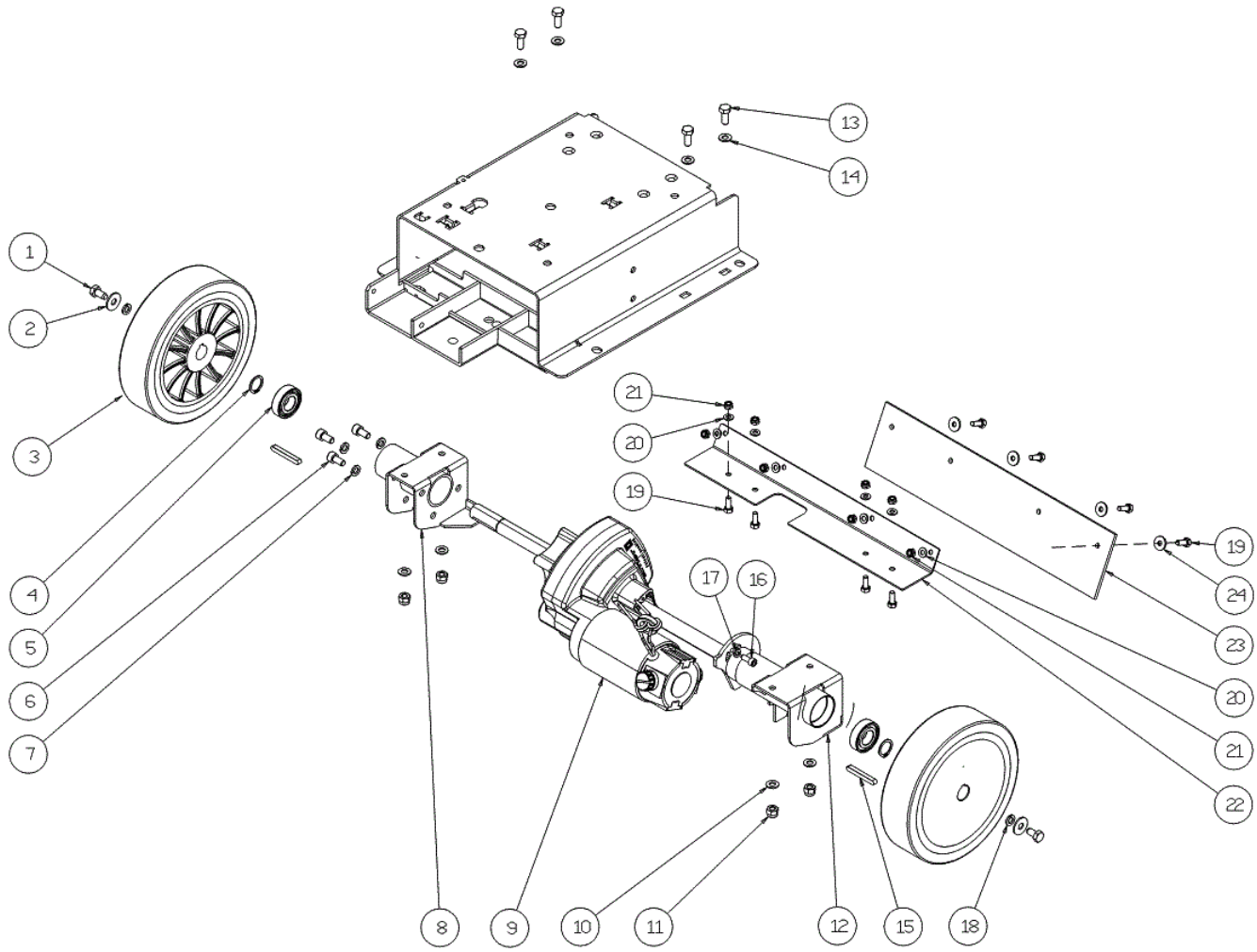

Ref.	K	Part N.	Customer Part N.	Description	Qty	Validity: From	To	Price
0001		VTVT15916		SCREW TE M 8X 16 UNI 5739 A2	2,00			--
0002		VTRS13946		WASHER D. 8 X24 INX UNI 6593	2,00			--
0003		RTRT00524		WHEEL -	2,00		05/2010	--
0003		RTRT00546		WHEEL D.200	2,00	06/2012		--
0003		RTRT00529		WHEEL D200	2,00	05/2010	06/2012	--
0004		VTAE06193		CIRCLIP D. 20 UNI 7435	2,00			--
0005		CUVR00083		BEARING 6004 2RS H SKF	2,00	09/2011		--
0005		CUVR19846		BALL BEARING 6004 2RS1	2,00		09/2011	--
0006		VTVT00876		SCREW TCEI M.8-16	3,00			--
0007		VTRS15146		WASHER D. 8 INX GRW UNI 1751	3,00			--
0008		LAFN07811		SUPPORT -	1,00			--
0009		MOCC00022		CARBON X MOT.COD.MOCC86902	2,00			--
0009		MOCC00395		MOTOR TRACTION 24V 200W 150G	1,00	10/2010		--
0009		MOCC00373		MOTOR -	1,00		10/2010	--
0010		VTRS13947		WASHER D. 8 INX UNI 6592	4,00			--
0011		VTDD01695		NUT M 8 INX	4,00			--
0012		LAFN07813		SUPPORT -	1,00			--
0013		VTVT15916		SCREW TE M 8X 16 UNI 5739 A2	4,00			--
0014		VTRS13947		WASHER D. 8 INX UNI 6592	4,00			--
0015		VTVR00566		KEY 6X10X40	2,00	06/2012		--
0015		VTVR33668		KEY 6x 6x40 UNI 6604A	2,00		06/2012	--
0016		VTVT00717		SCREW TCEI M. 6-16	2,00			--
0017		VTRS15144		WASHER D. 6 INX GRW UNI 1751	2,00			--
0018		VTRS15144		WASHER D. 6 INX GRW UNI 1751	2,00			--
0019		VTVT15143		SCREW TE 6X16 UNI5739	8,00	07/2012		--
0020		VTRS00245		WASHER D.6 UNI 6592 INOX	8,00	07/2012		--
0021		VTDD01694		NUT M6 INOX	8,00	07/2012		--
0022		LAFN07951		BRACKET CT40-90	1,00	07/2012		--
0023		MPVR06230		FLAP CT40 CT70-90	1,00	07/2012		--
0024		VTRS13945		WASHER D. 6X18 INX UNI 6593	4,00	07/2012		--

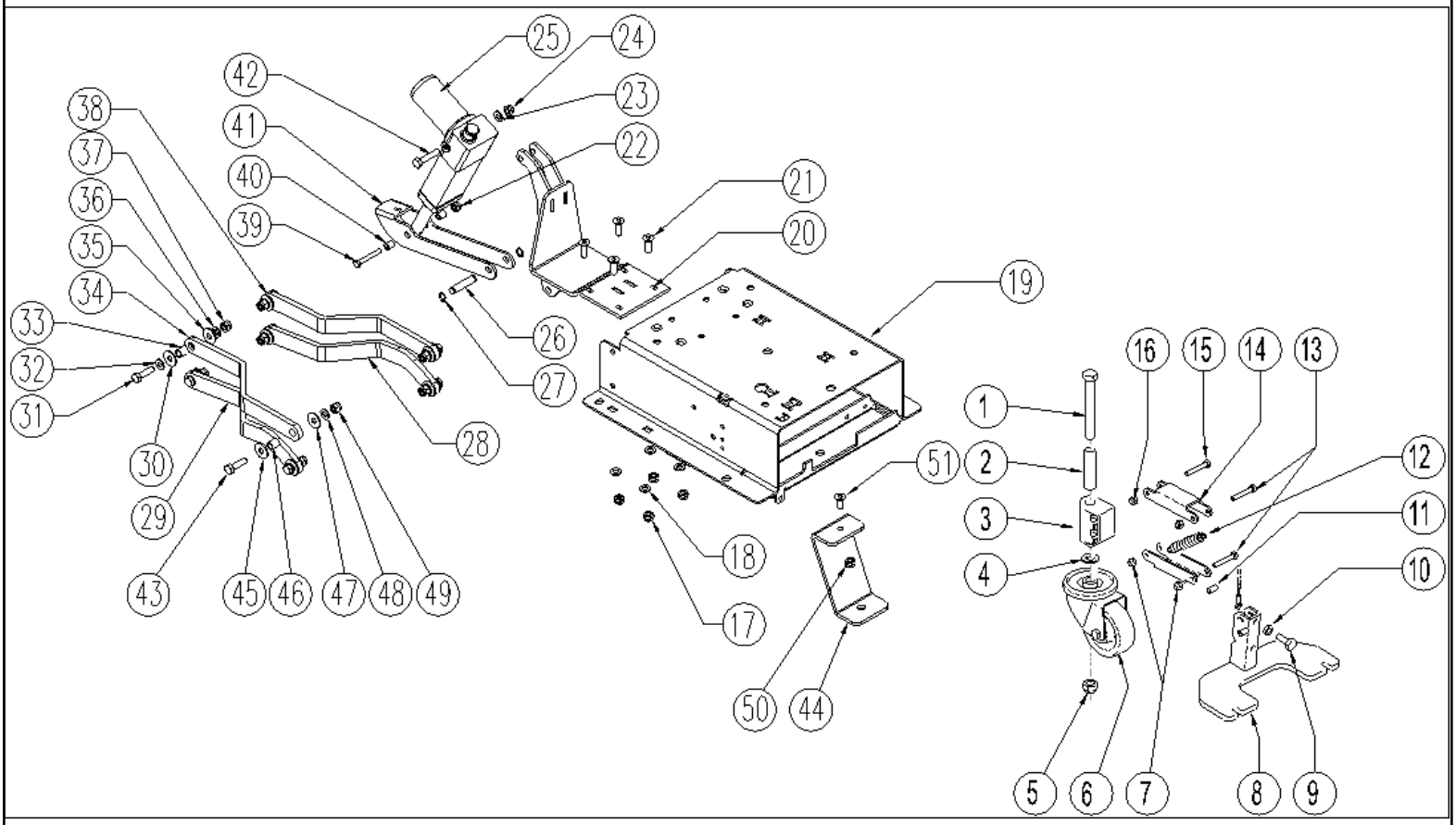

Ref.	K	Part N.	Customer Part N.	Description	Qty	Validity: From	To	Price
0001		VTVT24212		SCREW TE M 12X100 UNI 5737 INOX	1,00			--
0002		LAFN04188		PIN ROTAZIONE SQUEEGEE	1,00			--
0003		MPVR04734		BLOCK TERGI	1,00			--
0004		VTRS15978		WASHER D.12X24 UNI 6592 INX	1,00			--
0005		VTDD00176		NUT M.12 INOX A2 BASSO AUTOB.	1,00			--
0006		RTRT00518		WHEEL CASTOR D.80X30	1,00		08/2012	--
0006		RTRT00395		WHEEL CASTOR D.80X25 PU	1,00	08/2012		--
0007		VTDD01694		NUT M6 INOX	4,00			--
0008		LAFN07560		PLATE -	1,00			--
0009		VTVT13937		SCREW TE M 8X 30 INX UNI 5739	1,00		04/2011	--
0009		VTVT00410		SCREW TE M8x35 UNI5739 INOX	1,00	04/2011		--
0010		VTDD15521		NUT M 8 INX A2 UNI 5588	1,00			--
0011		LAFN06898		SPACER 6-8 h15	1,00			--
0012		MLML00303		SPRING REGISTRAZIONE FLAP	1,00			--
0013		VTVT01683		SCREW TE 6X40	4,00			--
0014		LAFN05853		LEVER ARM SOLLEVAMENTO TERGI	2,00			--
0015		VTVT15145		SCREW TE 6X40 UNI5739 INX	2,00			--
0016		VTDD01694		NUT M6 INOX	4,00			--
0017		VTDD01695		NUT M 8 INX	4,00			--
0018		VTRS13947		WASHER D. 8 INX UNI 6592	4,00			--
0019		LAFN07606		BASE -	1,00			--
0020		LAFN07823		SUPPORT -	1,00			--
0021		VTVT01352		SCREW TSPEI M8X20	4,00			--
0022		VTDD01694		NUT M6 INOX	1,00			--
0023		VTRS13947		WASHER D. 8 INX UNI 6592	1,00			--
0024		VTDD01695		NUT M 8 INX	1,00			--
0025		MOCC00383		ATUATOR CT70 ECS	1,00			--
0026		LAFN51065		PIN INFER.ATTUAT.TEST.	1,00			--
0027		VTAE13511		CIRCLIP D. 10 UNI 7435	2,00			--
0028		LAFN07824		ARM -	1,00			--
0029		LAFN07825		ARM -	1,00			--
0030		VTRS15978		WASHER D.12X24 UNI 6592 INX	4,00			--
0031		VTVT13937		SCREW TE M 8X 30 INX UNI 5739	4,00			--
0032		VTRS13947		WASHER D. 8 INX UNI 6592	4,00			--
0033		LAFN04151		BUSHING X PARALLELOGRAMMA	4,00			--
0034		LAFN07827		ARM -	1,00			--
0035		VTRS15978		WASHER D.12X24 UNI 6592 INX	4,00			--
0036		VTRS13947		WASHER D. 8 INX UNI 6592	4,00			--
0037		VTDD01695		NUT M 8 INX	4,00			--

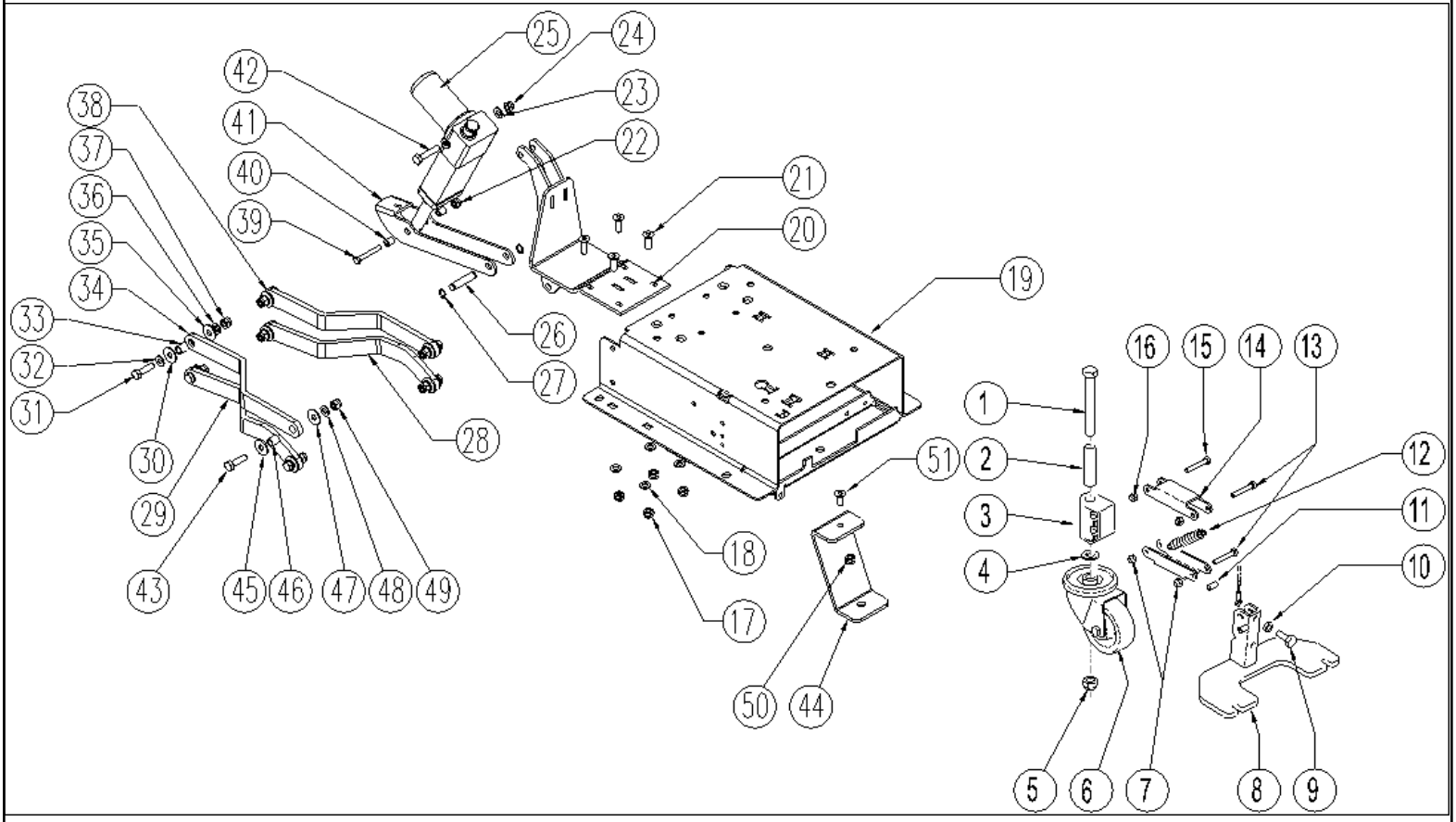

Ref.	K	Part N.	Customer Part N.	Description		Qty	Validity: From	To	Price
0038		LAFN07826		ARM	-	1,00			--
0039		VTVT15142		SCREW	TE M 6x45 INOX	1,00			--
0040		LAFN04187		SPACER	PER RIDUTTORE	2,00			--
0041		LAFN07828		ARM	-	1,00			--
0042		VTVT15371		SCREW	TE M 8X45 INOX A2 UNI	1,00			--
0043		VTVT01688		SCREW	TBEI M 8X 30 ISO 7380 IX	4,00			--
0044		LAFN06860		BRACKET	CT70	1,00			--
0045		VTRS15978		WASHER	D.12X24 UNI 6592 INX	4,00			--
0046		LAFN04151		BUSHING	X PARALLELOGRAMMA	4,00			--
0047		VTRS15978		WASHER	D.12X24 UNI 6592 INX	4,00			--
0048		VTRS13946		WASHER	D. 8 X24 INX UNI 6593	4,00			--
0049		VTDD01695		NUT	M 8 INX	4,00			--
0050		VTDD01695		NUT	M 8 INX	1,00			--
0051		VTVT00224		SCREW		1,00			--

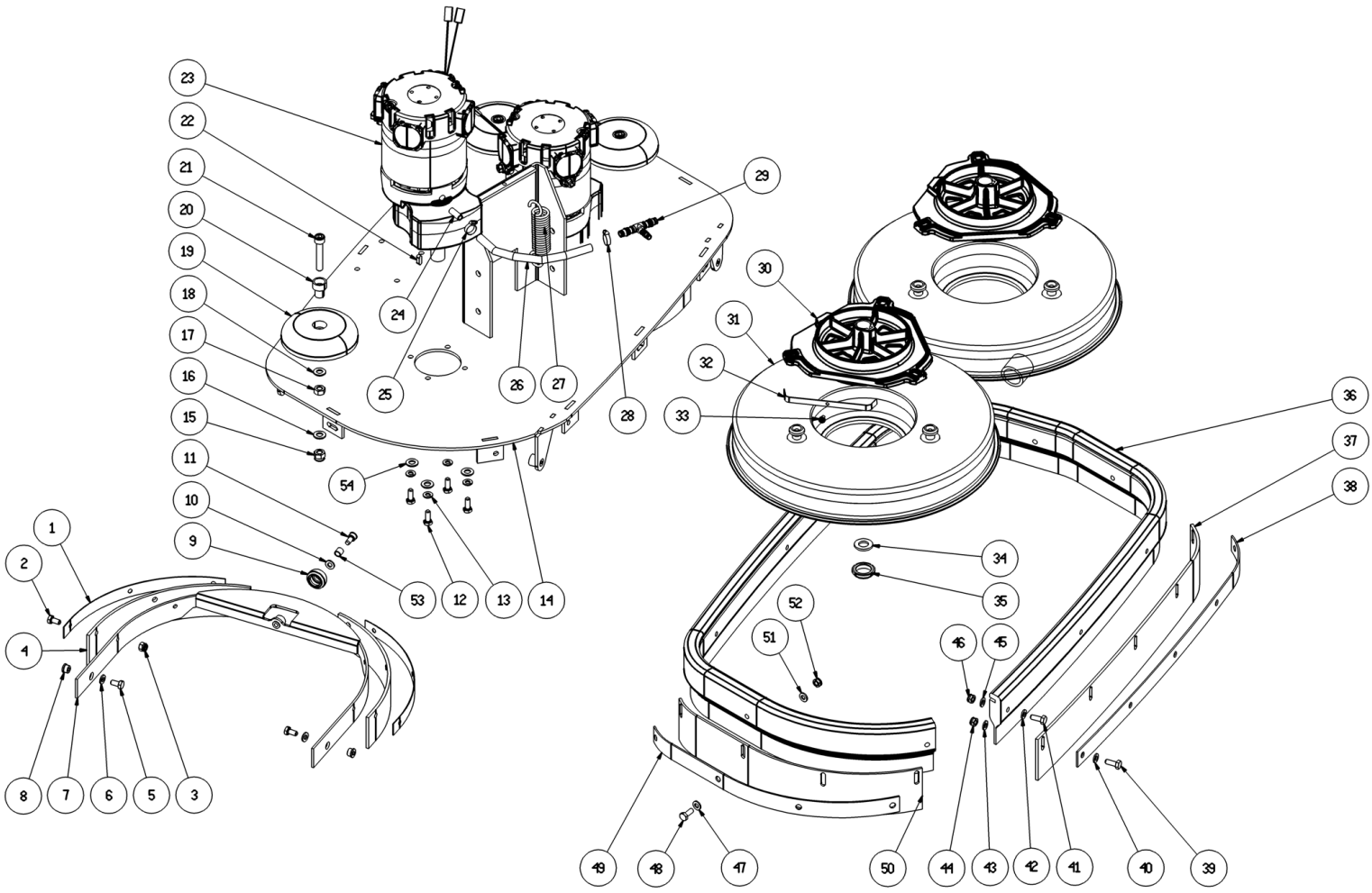

Ref.	K	Part N.	Customer Part N.	Description	Qty	Validity: From	To	Price
0001		LAFN51011		SHEET METAL PA.FISSA GOMMA CENTR	4,00			--
0002		VTVT07725		SCREW TE 5X16 UNI5739 INX	12,00			--
0003		VTDD01693		NUT M 5 INX	12,00			--
0004		MPVR02829		FLAP CENTRAGGIO SPAZZOLE P185	4,00			--
0005		VTVT01300		SCREW TE M5X12 INOX	4,00			--
0006		VTRS13750		WASHER D. 5X14 INX	4,00			--
0007		LAFN51023		ASSEMBLED CENTR.SPAZ.70	2,00			--
0008		CUVR00140		BUSHING DI CENTRAGGIO SPAZZOLE	4,00			--
0009		CUVR00184		BEARING -	2,00			--
0010		VTRS00245		WASHER D.6 UNI 6592 INOX	2,00			--
0011		VTVT00717		SCREW TCEI M. 6-16	2,00			--
0012		VTVT15906		SCREW TE 6X 12 A2 UNI 5739	8,00			--
0013		VTRS15144		WASHER D. 6 INX GRW UNI 1751	8,00			--
0014		LAFN07829		PLATE -	1,00			--
0015		VTDD01695		NUT M 8 INX	3,00			--
0016		VTRS13947		WASHER D. 8 INX UNI 6592	3,00			--
0017		VTDD15521		NUT M 8 INX A2 UNI 5588	3,00			--
0018		VTRS13947		WASHER D. 8 INX UNI 6592	3,00			--
0019		MPVR05290		ROLLER PARACOLPI	3,00			--
0020		LAFN03915		BUSHING NUOVO RUOTINO STRONG	3,00			--
0021		VTVT00775		SCREW TCEI M 8X40 ZC.BK UNI5931	3,00			--
0022		VTVR28706		KEY 6X 6X20 UNI 6604A	2,00			--
0023		MEVR01669		CARBON X MOT.COD.MOCC00298	1,00			--
0023		MOCC00382		MOTOR -	2,00			--
0024		LAFN07627		BUSHING -	2,00			--
0025		FSVR00087		CLAMP A COLLARE	2,00			--
0026		TBBP00003		TUBE CRISTALLO 6X9	0,03			--
0027		MLML00241		SPRING TESTATA SPAZZOLA P185	1,00			--
0028		FSVR00052		CLAMP 2,5X100	2,00			--
0029		RCVR01711		CONNECTOR T PORTAG.8/10	1,00			--
0030		MFVR00133		FLANGE TRASC. SPAZZOLA	2,00			--
0031		SPPV01268		DRIVE DISK MICROFIBRE	2,00			--
0032		MLML00231		SPRING ANTISGANCIO 85 X FLANGIA	2,00			--
0033		VTVT21887		SCREW TCB-TC 4X10 8112	2,00			--
0034		VTRS00571		WASHER -	2,00			--
0035		VTVR00328		RING NUT -	2,00			--
0036		MPVR05770		BUMPER CT70	1,00			--
0037		MPVR05763		FLAP CT70	1,00			--
0038		MPVR05767		PLATE CT70	1,00			--

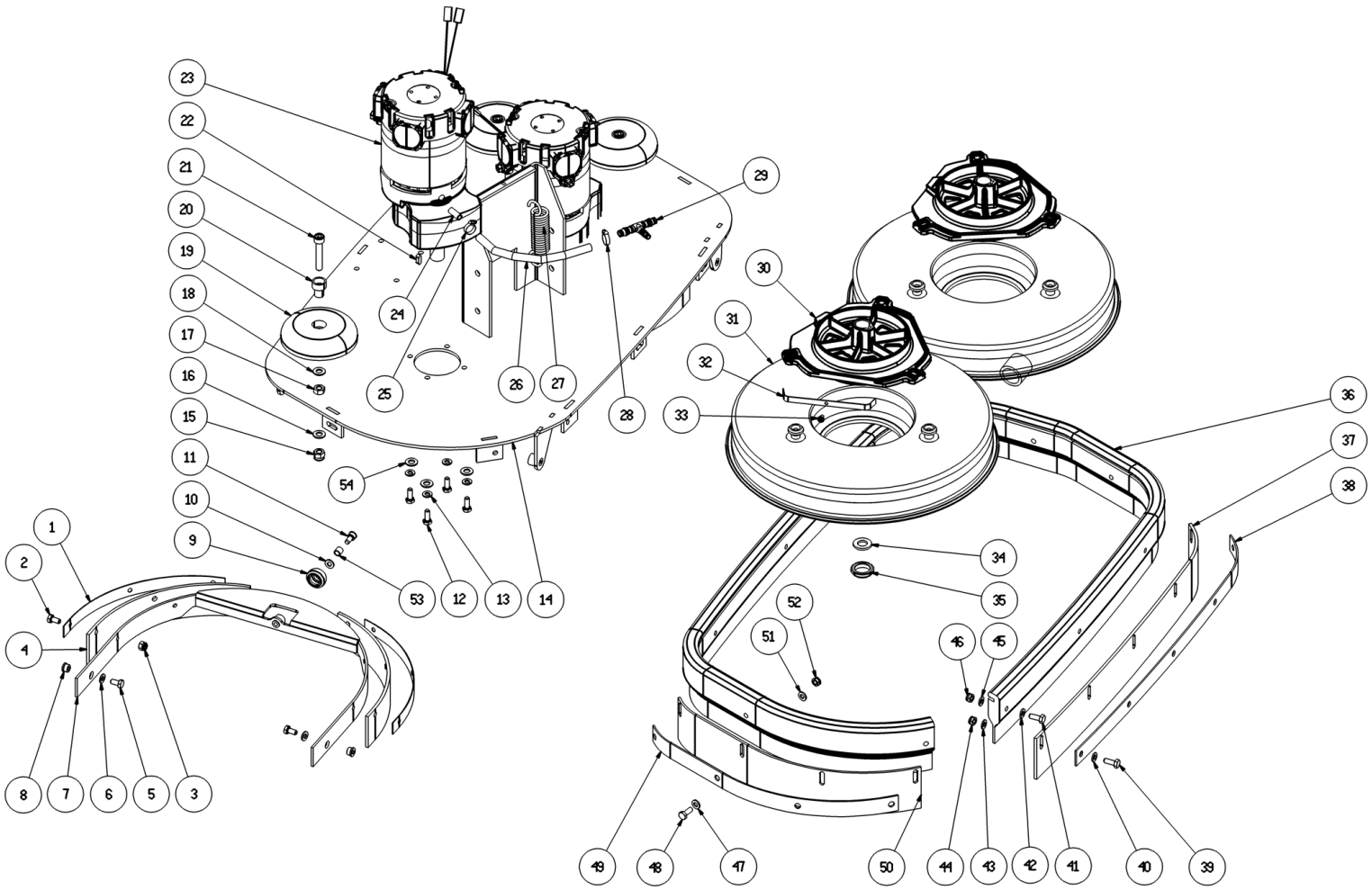

Ref.	K	Part N.	Customer Part N.	Description	Qty	Validity: From	To	Price
0039		VTVT13939		SCREW TE 6X20 UNI5739 INX	5,00			--
0040		VTRS13945		WASHER D. 6X18 INX UNI 6593	5,00			--
0041		VTVT00392		SCREW M6x35 UNI5739 inox	1,00			--
0042		VTRS13945		WASHER D. 6X18 INX UNI 6593	1,00			--
0043		VTRS13945		WASHER D. 6X18 INX UNI 6593	5,00			--
0044		VTDD01694		NUT M6 INOX	5,00			--
0045		VTRS13945		WASHER D. 6X18 INX UNI 6593	1,00			--
0046		VTDD01694		NUT M6 INOX	1,00			--
0047		VTRS13945		WASHER D. 6X18 INX UNI 6593	10,00			--
0048		VTVT15142		SCREW TE M 6x45 INOX	10,00			--
0049		MPVR05766		PLATE CT70	1,00			--
0050		MPVR05762		FLAP CT70	1,00			--
0051		VTRS13945		WASHER D. 6X18 INX UNI 6593	10,00			--
0052		VTDD01694		NUT M6 INOX	10,00			--
0053		LAFN03840		BUSHING	2,00			--
0054		VTRS00245		WASHER D.6 UNI 6592 INOX	8,00			--

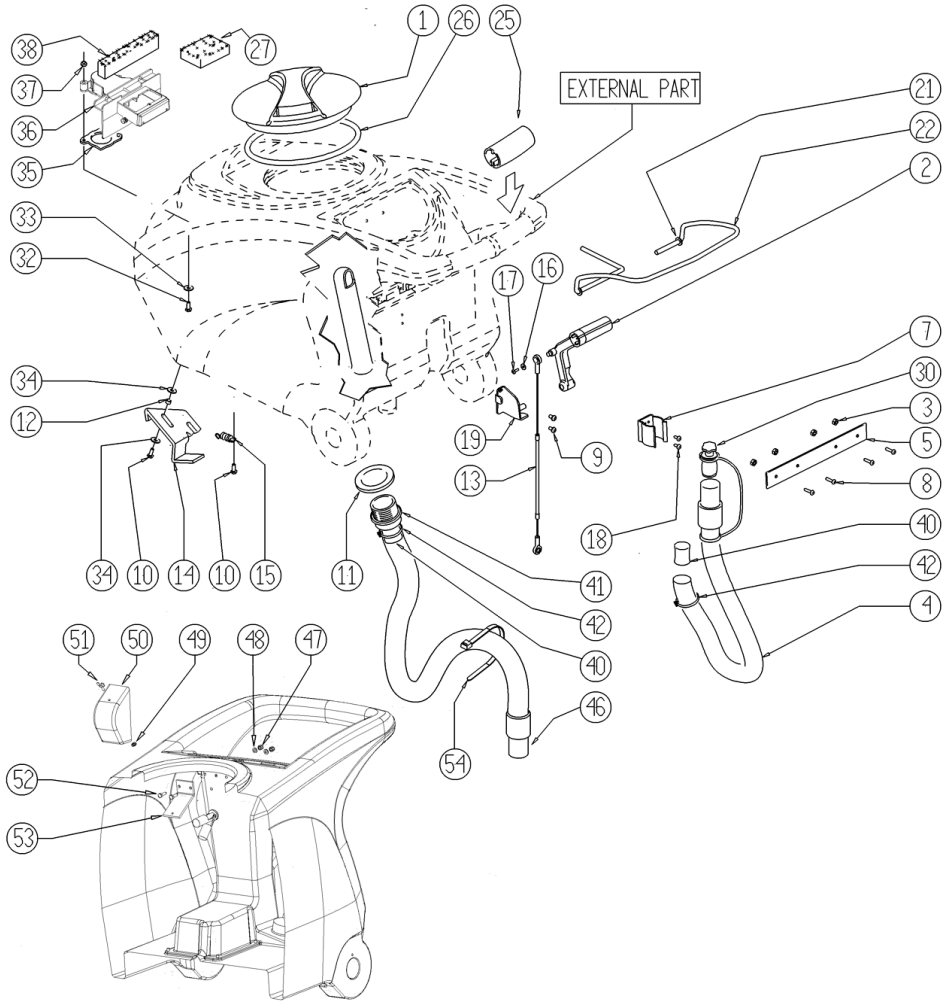

Ref.	K	Part N.	Customer Part N.	Description	Qty	Validity: From	To	Price
0001		MPVR04051		TANK CAP	1,00			--
0002		MPVR49942		LEVER SHK PP	1,00			--
0003		VTDD15518		NUT M 6 INX	4,00			--
0004		TBBP00405		TUBE SCARICO	1,00		06/2010	--
0004		TBBP00456		TUBE CT40/70	1,00	06/2010	02/2011	--
0004		TBFX00348		TUBE CT40-70-90 HOSE DRAIN	1,00	02/2011		--
0005		LAFN05865		PLATE COPRILEVA CONSENSO	1,00			--
0007		MPVR46988		CLIP LAV. SHK	1,00			--
0008		VTVT00651		SCREW TBEI M. 5x16 INOX	4,00			--
0009		VTVT15906		SCREW TE 6X 12 A2 UNI 5739	2,00			--
0010		VTVT15143		SCREW TE 6X16 UNI5739	3,00			--
0012		LAFN03626		SPACER	2,00			--
0013		CMCV00428		CABLE SQUEEGEE	1,00			--
0014		LAFN06849		HANDLE CT 70	1,00			--
0015		MLML00203		SPRING	1,00			--
0016		VTRS00251		WASHER 4-16 INOX A2	1,00			--
0017		VTVT00800		SCREW TC 4X12 ZN	1,00			--
0018		VTVT21096		SCREW TE M 4X 10 INX	2,00			--
0019		LAFN05870		BRACKET LEVA SOLLEVAM. SQUEEGEE	1,00			--
0021		VTRS13947		WASHER D. 8 INX UNI 6592	2,00			--
0022		LAFN05861		LEVER CONSENSO SPAZZOLE	1,00			--
0025		MPVR05215		KNOB -	2,00			--
0026		GUGO00263		GASKET CIRCOLARE TAPPO	1,00			--
0027		FTDP00133		FILTER	1,00			--
0030		MPVR05064		CAP COMPLETO	1,00		06/2010	--
0032		VTVT01139		SCREW TE M.4-25	2,00			--
0033		VTRS00515		WASHER D. 4 INX	2,00			--
0034		VTRS00274		WASHER NYLON 66 D.8,4-17-2 UNI	4,00			--
0035		GUGO00417		GASKET SCATOLA ASPIRAZIONE	1,00			--
0036		MPVR05482		BOX -	1,00			--
0037		VTDD15925		NUT M 4 INX	2,00			--
0038		GUGO00418		GASKET CONDOTTO ASPIRAZIONE	1,00			--
0040		GUGO00245		GASKET	1,00			--
0046		TBBP00453		TUBE TERGI D.40	1,00		10/2010	--
0046		TBFX00353		TUBE PU CT70-CT90	1,00	01/2012		--
0046		TBFX00337		TUBE L=1100	1,00	10/2010	01/2012	--
0047		VTDD01693		NUT M 5 INX	2,00			--
0048		VTRS00516		WASHER D. 5 INX	2,00			--
0049		VTVR01038		WASHER -	1,00			--

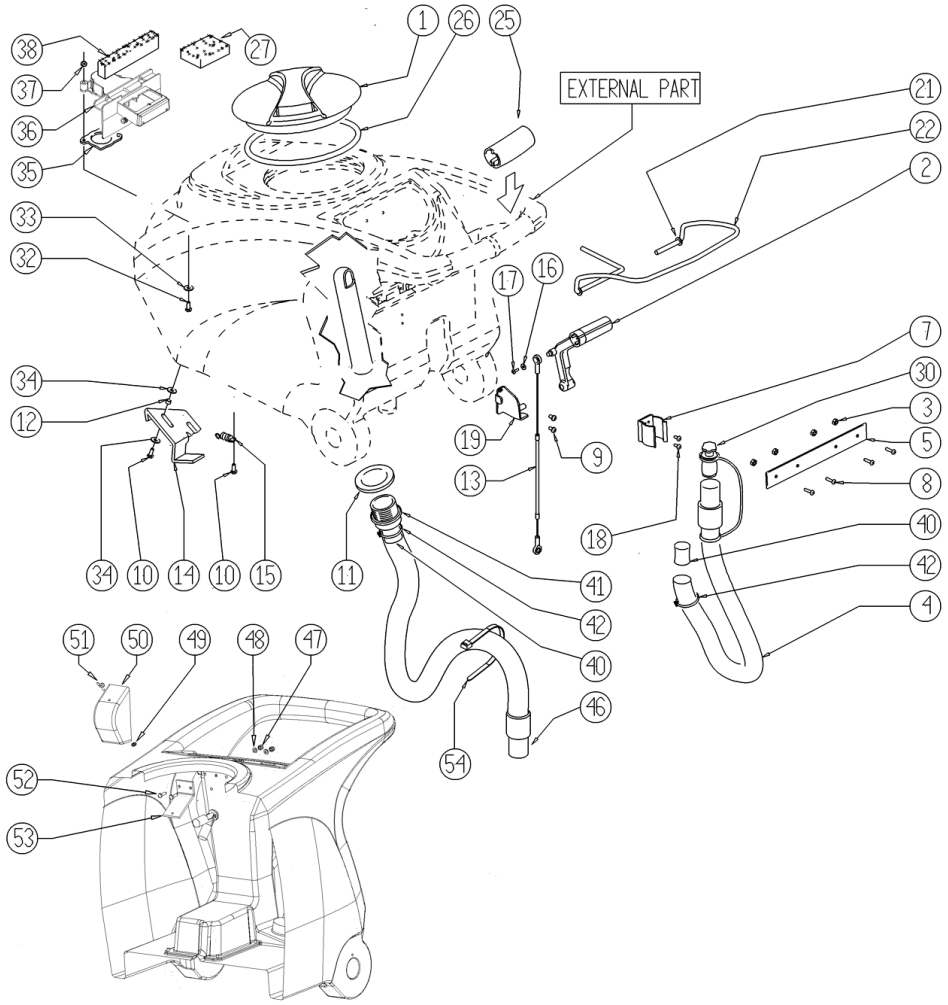

Ref.	K	Part N.	Customer Part N.	Description	Qty	Validity: From	To	Price
0050		MPVR05596		PROTECTION -	1,00			--
0051		VTVT01150		SCREW 4x10	1,00			--
0052		VTVT07725		SCREW TE 5X16 UNI5739 INX	2,00			--
0053		LAFN07631		BRACKET -	1,00			--
0054		FSVR00248		CLAMP -	1,00	10/2010		--

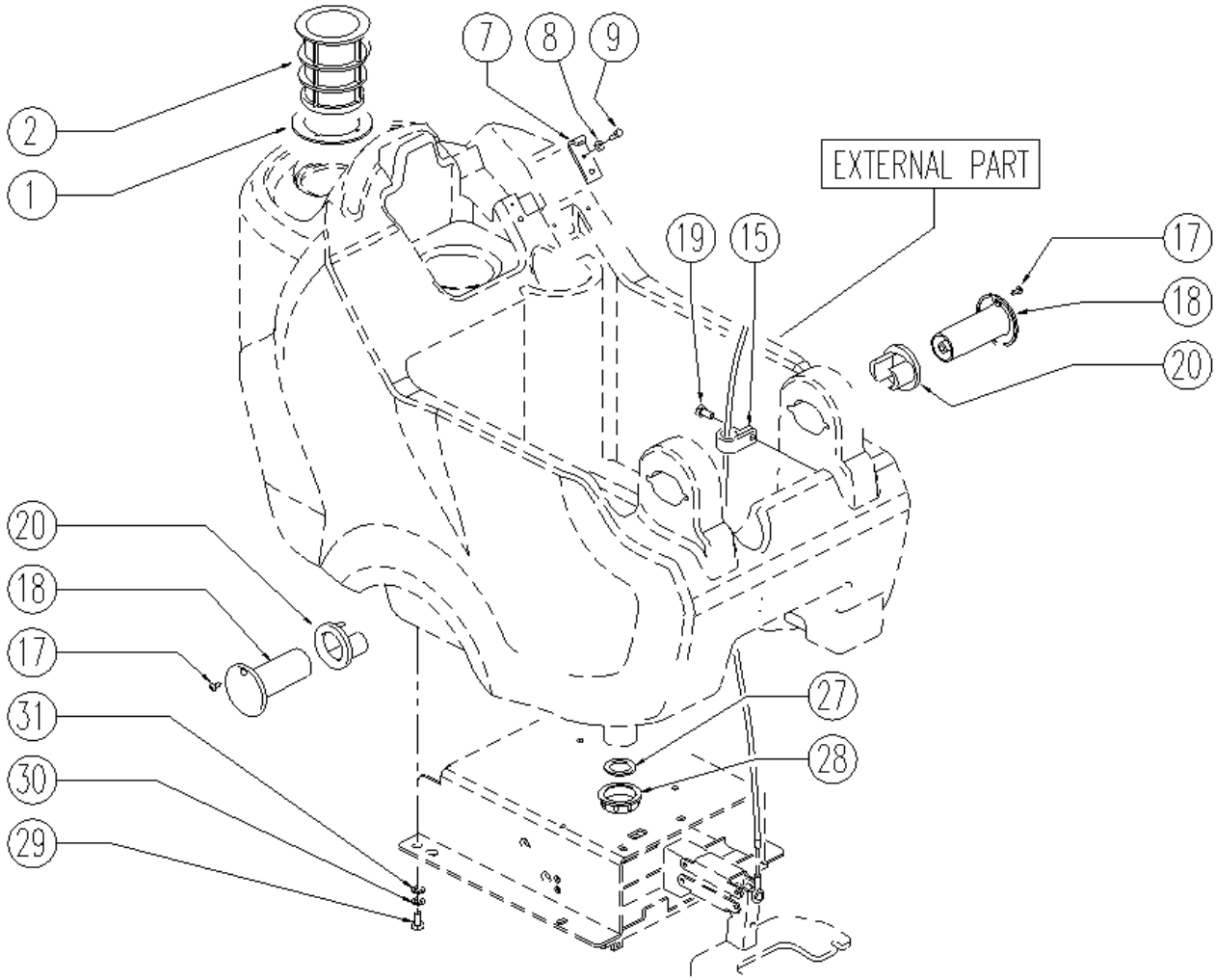

Ref.	K	Part N.	Customer Part N.	Description	Qty	Validity: From	To	Price
0001		GUGO00267		GASKET FILTRO	1,00			--
0002		FTAC00040		FILTER -	1,00			--
0007		LAFN06489		PLATE	1,00			--
0008		VTRS15144		WASHER D. 6 INX GRW UNI 1751	1,00			--
0009		VTVT01303		SCREW TE M6-10 INOX	1,00			--
0015		MPVR02933		DUCT LOCK D.9,5	2,00			--
0017		VTVT48694		SCREW TCB TC 5 X12 UNI 9707 TZ	2,00			--
0018		MPVR48695		PIN SHK.BK	2,00			--
0019		VTVT15961		SCREW M 5X 16 TCB TC UNI 7687	1,00			--
0020		PMVR02028		RUBBER GRUPPO MONTAGGIO	2,00			--
0027		KTRI03463		CAP SCARICO SERBATOIO SOLUZ.	1,00			--
0028		KTRI03463		CAP SCARICO SERBATOIO SOLUZ.	1,00			--
0029		VTVT15916		SCREW TE M 8X 16 UNI 5739 A2	4,00			--
0030		VTRS00269		WASHER D. 8 DIN 6798-A INX A2	4,00			--
0031		VTRS13947		WASHER D. 8 INX UNI 6592	4,00			--

Table: VACUUM CLEANER

Progressive Number: 1

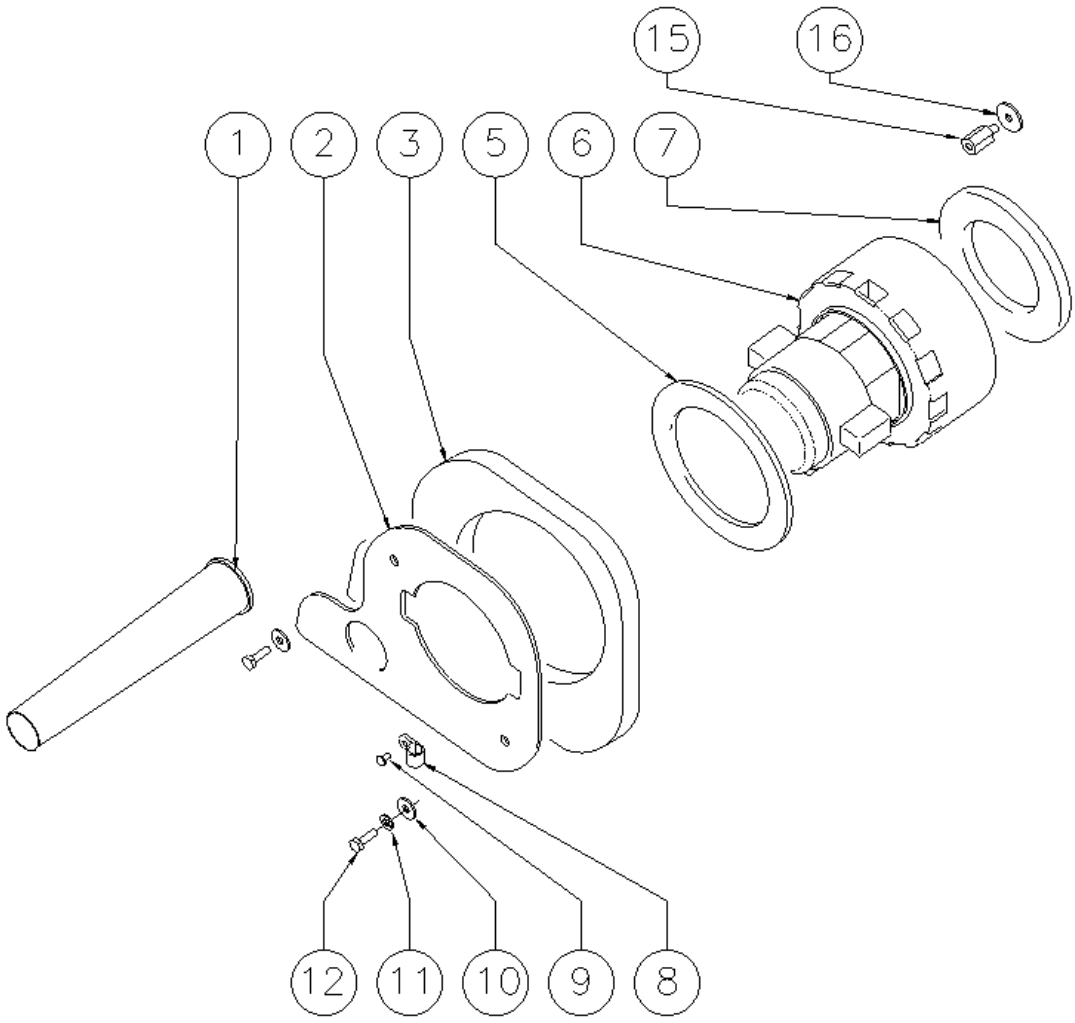

Ref.	K	Part N.	Customer Part N.	Description	Qty	Validity: From	To	Price
0001		MPVR05259		TUBE SCARICO	1,00			--
0002		LAFN06363		FLANGE ASPIRATORE	1,00			--
0003		MPVR05103		SOUND-PROOFING ASPIRATORE	1,00			--
0005		MPVR04724		FLANGE IN NYLON	1,00			--
0006		MOCC00342		VACUUM CLEANER 24V	1,00			--
0007		GUGO00272		GASKET VACUUM MOTOR CT	1,00			--
0008		FSVR00099		CLAMP FERMATUBO	1,00			--
0009		VTVT00813		SCREW M 4X 8 TCB-TC UNI 8112	1,00			--
0010		VTRS13945		WASHER D. 6X18 INX UNI 6593	2,00			--
0011		VTRS15144		WASHER D. 6 INX GRW UNI 1751	2,00			--
0012		VTVT15143		SCREW TE 6X16 UNI5739	2,00			--
0015		LAFN07856		SPACER -	2,00			--
0016		VTRS13945		WASHER D. 6X18 INX UNI 6593	2,00			--

Table: SOLENOID VALVE

Progressive Number: 1

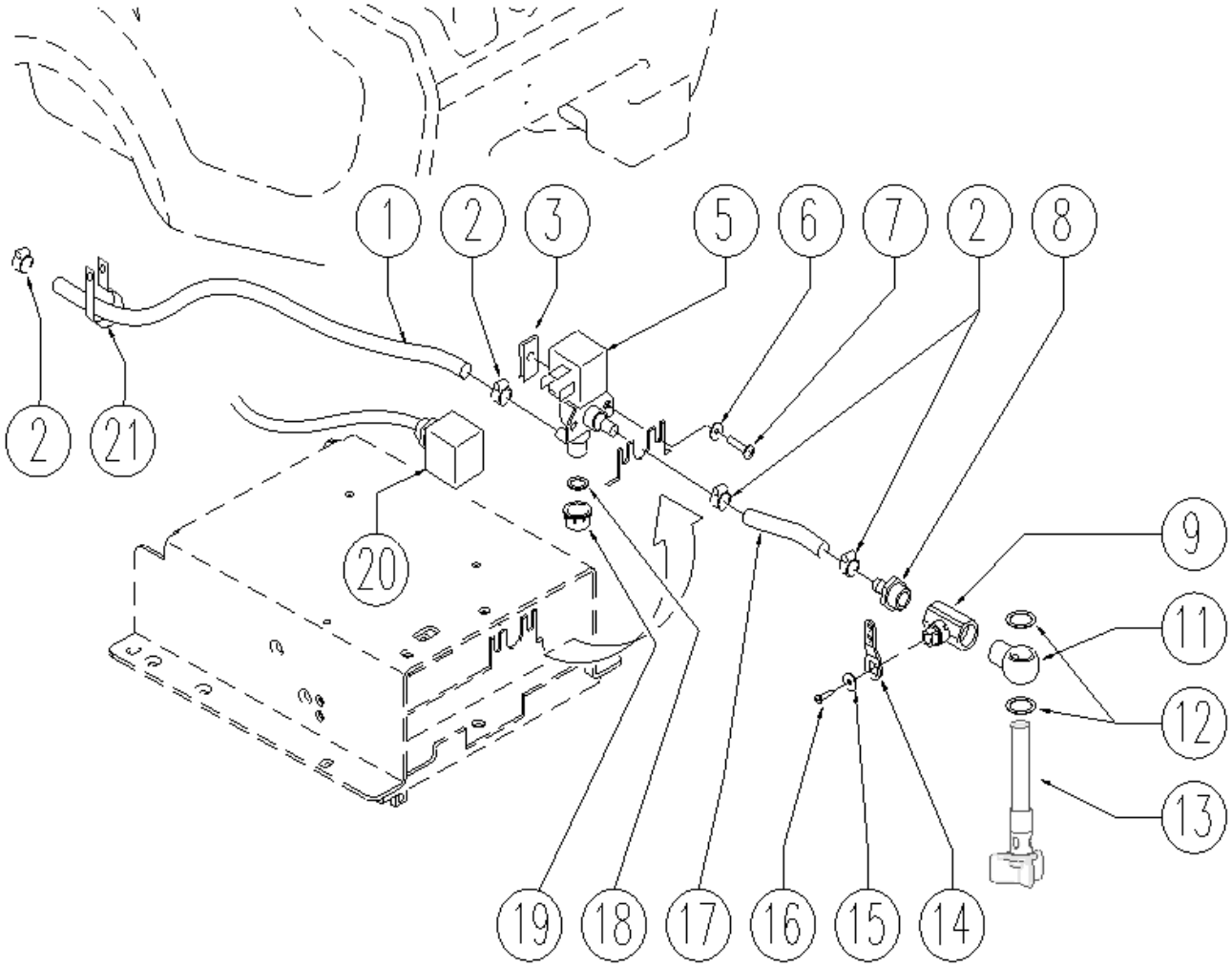

Ref.	K	Part N.	Customer Part N.	Description	Qty	Validity: From	To	Price
0001		TBFX00308		TUBE L=580MM	1,00			--
0002		FSVR00091		CLAMP 14-24	4,00			--
0003		MLML00002		SPRING PRESTOLA DOPPIA 8P	2,00			--
0005		MEEV00018		SOLENOID VALVE	1,00			--
0006		VTRS00516		WASHER D. 5 INX	2,00			--
0007		VTVT48694		SCREW TCB TC 5 X12 UNI 9707 TZ	2,00			--
0008		RCVR00536		CONNECTOR PORTAG.	1,00			--
0009		RCGR00065		TAP F/F 1/2"	1,00			--
0011		RCDS49622		CONNECTOR OCC 1/2 - 1/2M	1,00			--
0012		VTRS00567		WASHER 1/2	2,00			--
0013		MPVR05221		FILTER COMPLETO	1,00			--
0014		LAFN05902		LEVER RUBINETTO	1,00			--
0015		VTRS00251		WASHER 4-16 INOX A2	1,00			--
0016		VTVT01316		SCREW TC+ M3-16	1,00			--
0017		TBFX00309		TUBE FLEX D.10X3 L=155MM	1,00			--
0018		GUGO00268		GASKET D.21 SP.3 GOMMA	1,00			--
0019		RCVR00353		CAP 1/2"G X ELETTROV. ACL	1,00			--
0020		MECB01234		WIRING	1,00			--
0021		FSVR00043		CLAMP d.16	1,00			--

Table: CRANKCASE

Progressive Number: 1

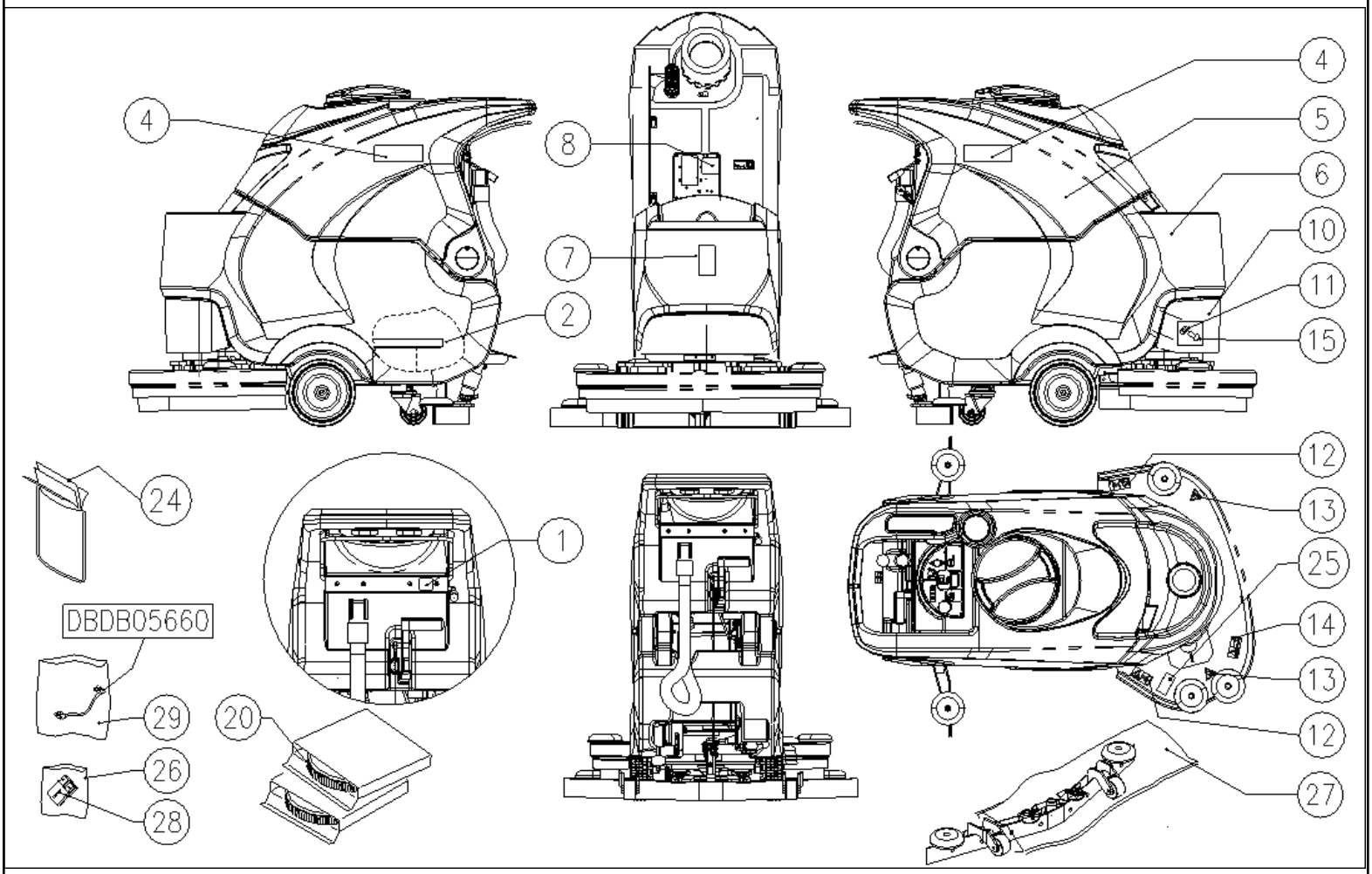

Ref.	K	Part N.	Customer Part N.	Description	Qty	Validity: From	To	Price
0001		ETET01447		LABEL	1,00			--
0002		LAFN35588		BATTERY SUPPORTLAV. BT	1,00			--
0004		ETET01655		LABEL -	2,00			--
0005		MPVR05560		TANK SOLUZIONE CT75	1,00			--
0006		MPVR05559		TANK SOLUZIONE CT75	1,00			--
0007		ETET01637		LABEL -	1,00			--
0008		ETET00763		LABEL SIMBOLO FUSIBILI	1,00			--
0010		MPVR04984		FRONT PANEL	1,00			--
0011		VTRS00516		WASHER D. 5 INX	4,00			--
0012		ETET00906		ADHESIVE SIMBOLO PERICOLO DI ABRAS	2,00			--
0013		ETET00897		ADHESIVE SIMBOLO PERICOLO	2,00			--
0014		ETET00898		ADHESIVE SIMBOLO SCHIACCIAMENTO	1,00			--
0015		VTVT15961		SCREW M 5X 16 TCB TC UNI 7687	4,00			--
0020		SPPV01270		BRUSH NYLON 0,5mm D.350	2,00			--
0024		PLDC01602		INSTR.MANUAL 40-70-90	1,00			--
0025		ETET01658		LABEL -	2,00			--
0026		MIVR00072		ENVELOPE PLASTICA TRASP.	1,00			--
0027		MIVR00048		TUBE UNIBOL	1,00			--
0028		MEVR01079		PLUG M CB50 A 600V RD.	1,00			--
0029		MIVR00064		ENVELOPE PORTA CABLAGGI	1,00			--

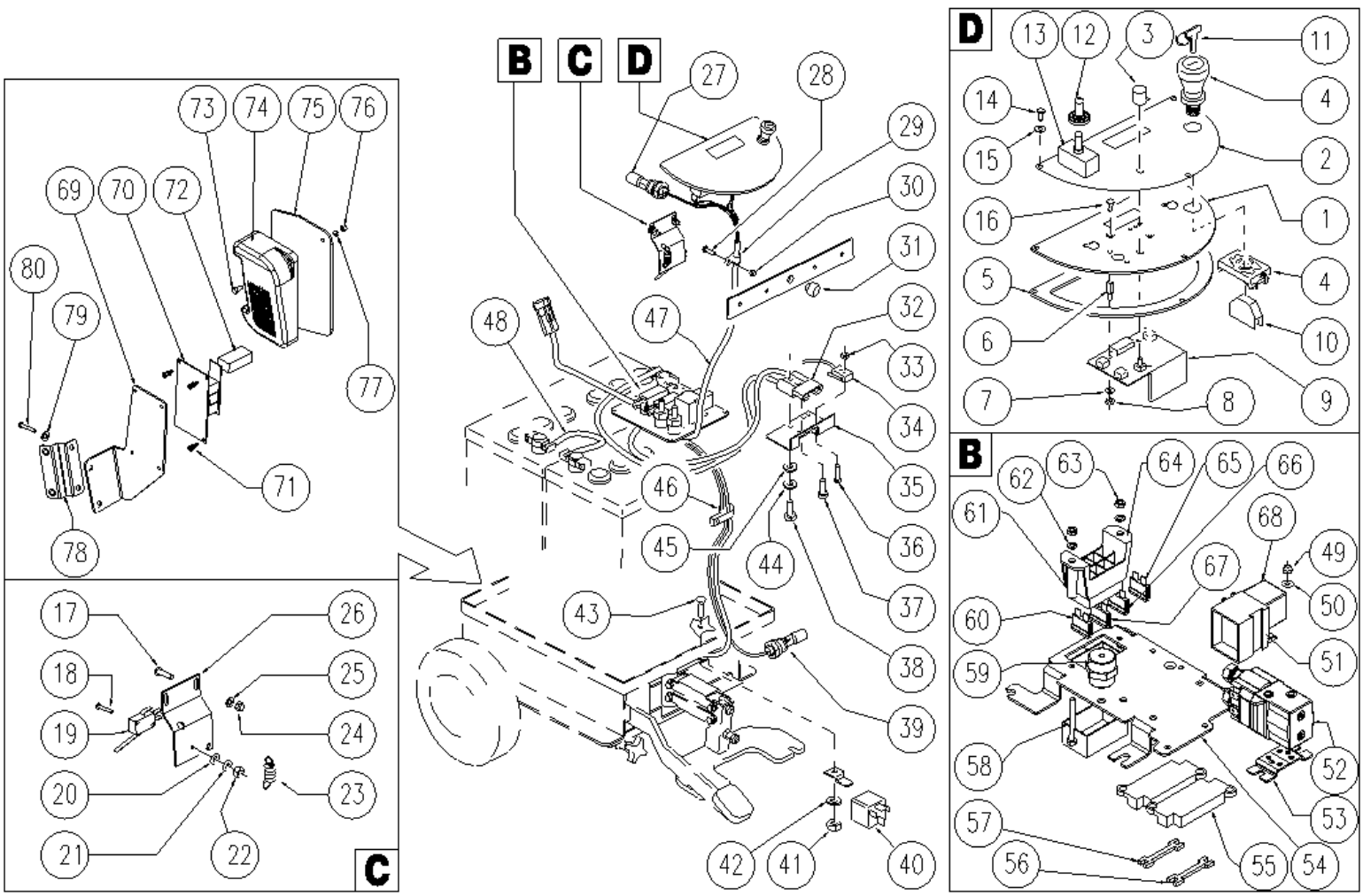

Ref.	K	Part N.	Customer Part N.	Description	Qty	Validity: From	To	Price
0001		LAFN07841		PLATE -	1,00			--
0002		ETET01657		LABEL -	1,00			--
0003		MEVR01666		KNOB POTENTIOMETER	1,00			--
0004		MECI00402		BUTTON A FUNGO	1,00			--
0005		GUGO38417		GASKET PANN.COM.EXTREME	1,00			--
0006		VTVR00481		INSERT FILETTATO M6	3,00			--
0007		VTRS00268		WASHER D.3	5,00			--
0008		VTDD21115		NUT M 3 INOX	5,00			--
0009		MECE00517	#8529.90.2200	BOARD CT70 ECS	1,00			--
0010		MECI00403		CONTACT -	1,00			--
0011		CHVR00051	#8479.90.9498	DIASASS.SPANNERPULSANTE FUNGO	1,00			--
0012		MEVR01975		RUBBER DEVIATORE	1,00			--
0013		MECI34120		SWITCH T 115-EA	1,00			--
0014		VTVT37012		SCREW M 4X 10 TCB-TC INX	3,00			--
0015		VTRS00515		WASHER D. 4 INX	3,00			--
0016		VTVT00865		SCREW TSP-TC M 3X 6 UNI7688 INX	3,00			--
0017		VTVT07725		SCREW TE 5X16 UNI5739 INX	2,00			--
0018		VTVT01316		SCREW TC+ M3-16	2,00			--
0019		MECI36393		MICROSWITCH TRZ. DRW	1,00			--
0020		VTRS21116		WASHER D. 3 INX	2,00			--
0021		VTRS00268		WASHER D.3	2,00			--
0022		VTDD21115		NUT M 3 INOX	2,00			--
0023		MLML34726		SPRING TR E350 N	1,00			--
0024		VTDD01693		NUT M 5 INX	2,00			--
0025		VTRS00516		WASHER D. 5 INX	2,00			--
0026		LAFN05904		PLATE MICRO LEVA	1,00			--
0027		MECI00516		SENSOR DI LIVELLO ORIZZONTALE	1,00			--
0028		VTVT00704		SCREW TE M 4X 16 UNI5739 INOX	1,00			--
0029		FSVR00099		CLAMP FERMATUBO	2,00			--
0030		VTDD15925		NUT M 4 INX	1,00			--
0031		MPVR00043		CAP CHIUS.FORO PORTAFUS.L 15	1,00			--
0032		MEVR01707		CONNECTOR -	1,00			--
0033		VTDD08634		NUT M2	2,00			--
0034		MECI00334		MICROSWITCH V4	1,00			--
0035		LAFN06409		SUPPORT -	1,00			--
0036		VTVT00671		SCREW TC- M.2-16 OTTONE	2,00			--
0037		VTVT00872		SCREW TSP+ 2.9X13 AUTOFIL. INOX	1,00			--
0038		VTVT00814		SCREW TE M.4-25	2,00			--
0039		MECI00516		SENSOR DI LIVELLO ORIZZONTALE	1,00			--

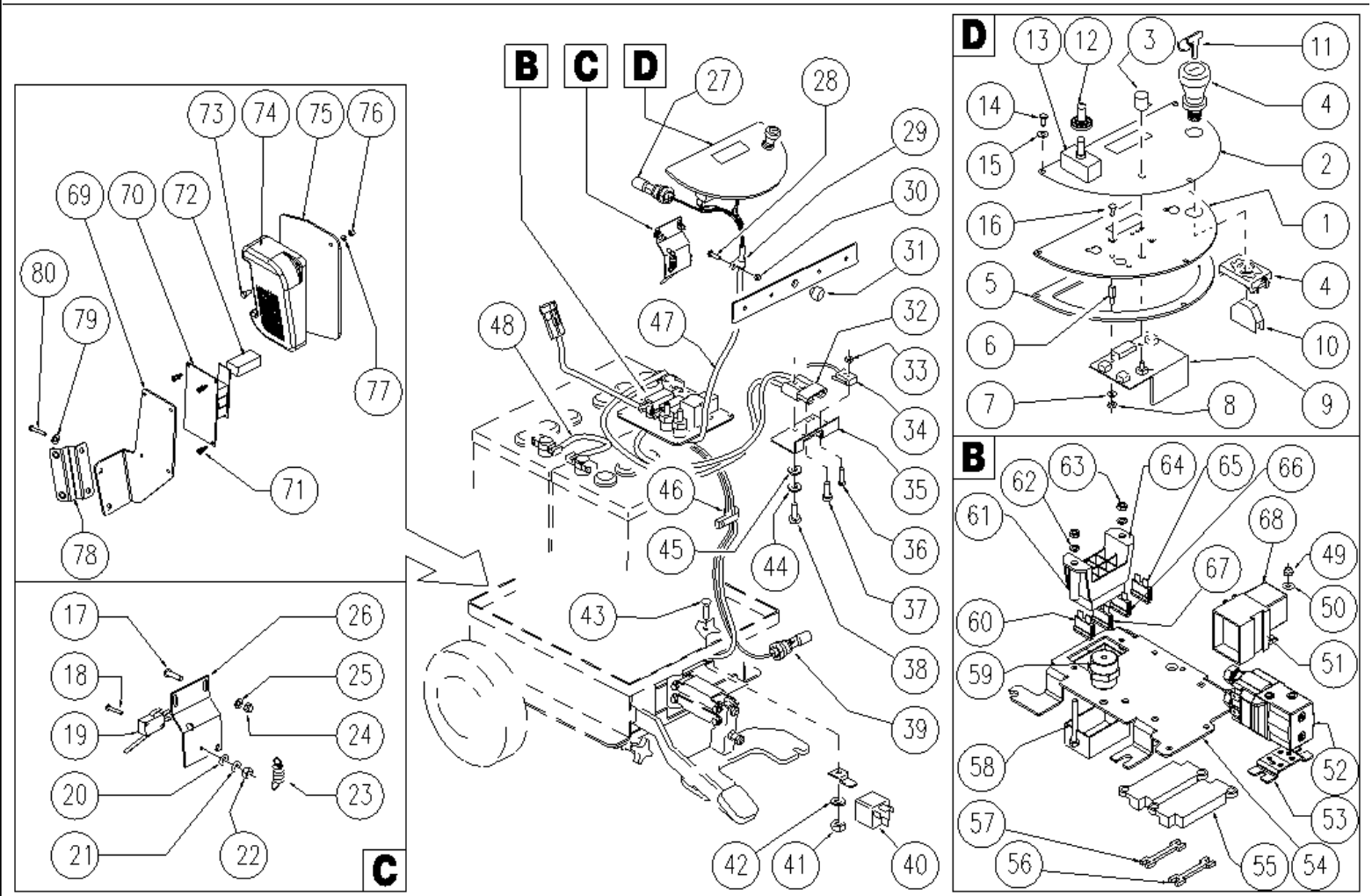

Ref.	K	Part N.	Customer Part N.	Description	Qty	Validity: From	To	Price
0040		MECI00005		RELAY 24V 10/20A	1,00			--
0041		VTDD01694		NUT M6 INOX	1,00			--
0042		VTRS00245		WASHER D.6 UNI 6592 INOX	1,00			--
0043		VTVT01676		SCREW TSTC UNI 7688 M6X16	1,00			--
0044		VTRS15913		WASHER D. 4 GROVER A2 UNI1751	2,00			--
0045		VTRS00515		WASHER D. 4 INX	2,00			--
0046		FSVR00099		CLAMP FERMATUBO	1,00			--
0047		MECB01234		WIRING	1,00			--
0048		MEVR34820		WIRING B 450 BT	1,00			--
0049		VTDD00147		NUT M 4 INX U.5588	1,00			--
0050		VTRS13750		WASHER D. 5X14 INX	1,00			--
0051		METT00053		BLOCK PORTA RELE'	1,00			--
0052		METT00079		CONTACTOR E TL 10P 24V 100A	1,00			--
0053		LAFN07345		BRACKET TL10	1,00			--
0054		LAFN07460		SUPPORT -	1,00			--
0055		MEVR01332		FUSE-HOLDER	2,00			--
0056		MEVR02887		FUSE 40A NST.	1,00			--
0057		MEVR00604		FUSE	1,00			--
0058		VTVT00880		SCREW TE 4X40	2,00			--
0059		MEVR44054		INSULATOR M6 20-CH17	1,00			--
0060		MEVR01428		FUSE A LAMA 2 A. UNIVAL	1,00			--
0061		LAFN06735		SPACER 6-8 H31.5	2,00			--
0062		VTRS15913		WASHER D. 4 GROVER A2 UNI1751	2,00			--
0063		VTDD00147		NUT M 4 INX U.5588	2,00			--
0064		MEVR00030		FUSE-HOLDER 4 VIE COPERCHIO TRAS.	1,00			--
0065		MEVR01428		FUSE A LAMA 2 A. UNIVAL	1,00			--
0066		MEVR01132		FUSE A LAMA 5 A.	1,00			--
0067		MEVR00039		FUSE LAMELLARE 20A	1,00			--
0068		MERL00006		SWITCH RELAY R502 024 H3M 1NO 80A	1,00			--
0069		LAFN07834		PLATE -	1,00			--
0070		MECE00510		BOARD CT110-MF	1,00			--
0071		MEVR01708		COLUMN -	4,00			--
0072		MECE00456		RELAY CT110	4,00			--
0073		VTVT00727		SCREW TE M. 4-20	2,00			--
0074		MECE00511		BOARD CT110-MF	1,00			--
0075		LAFN07832		PLATE -	1,00			--
0076		VTDD00147		NUT M 4 INX U.5588	2,00			--
0077		VTRS15913		WASHER D. 4 GROVER A2 UNI1751	2,00			--
0078		LAFN07247		BRACKET CT90	2,00			--

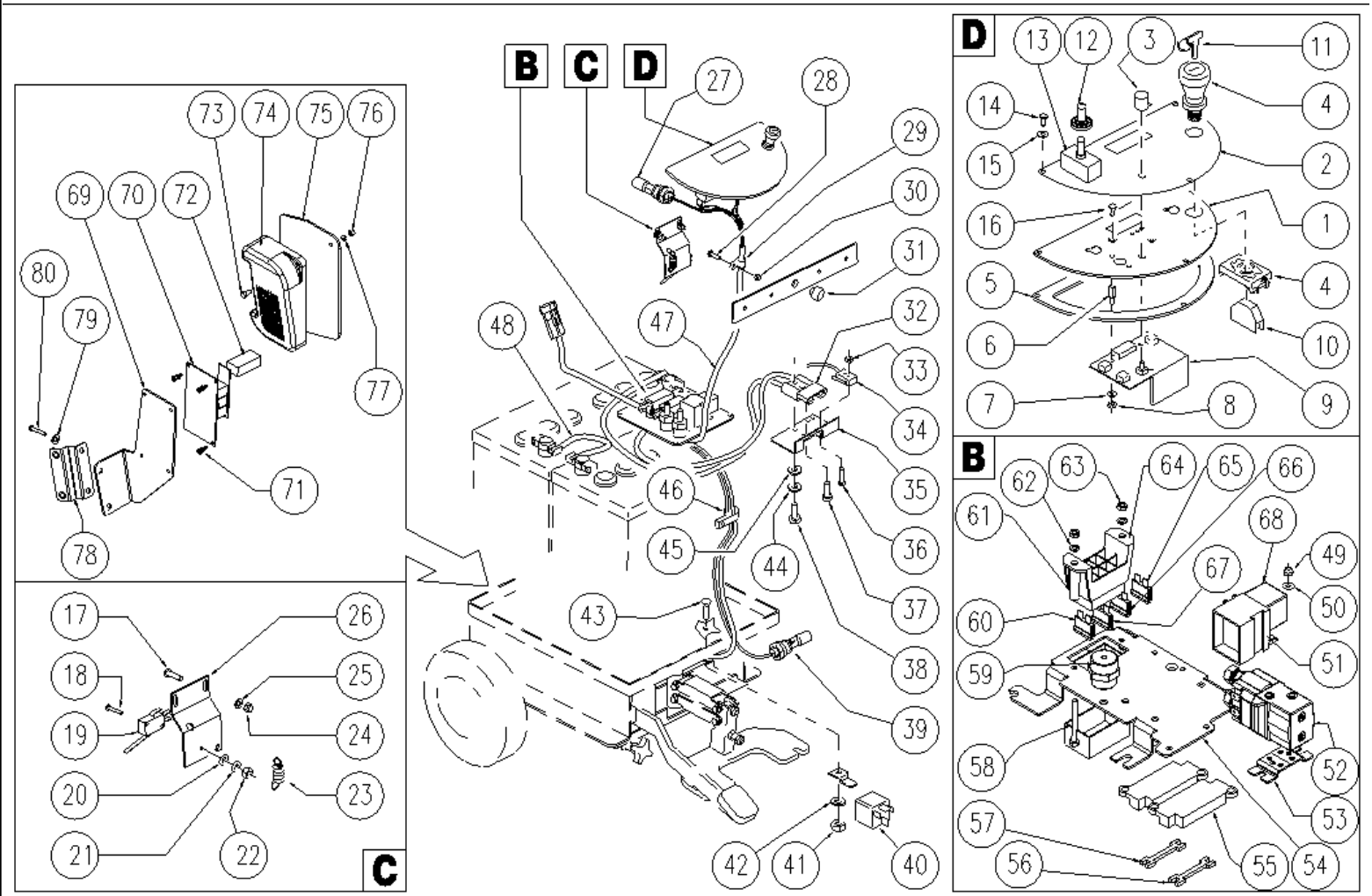

Ref.	K	Part N.	Customer Part N.	Description	Qty	Validity: From	To	Price
0079		VTRS00516		WASHER D. 5 INX	4,00			--
0080		VTVT07725		SCREW TE 5X16 UNI5739 INX	4,00			--

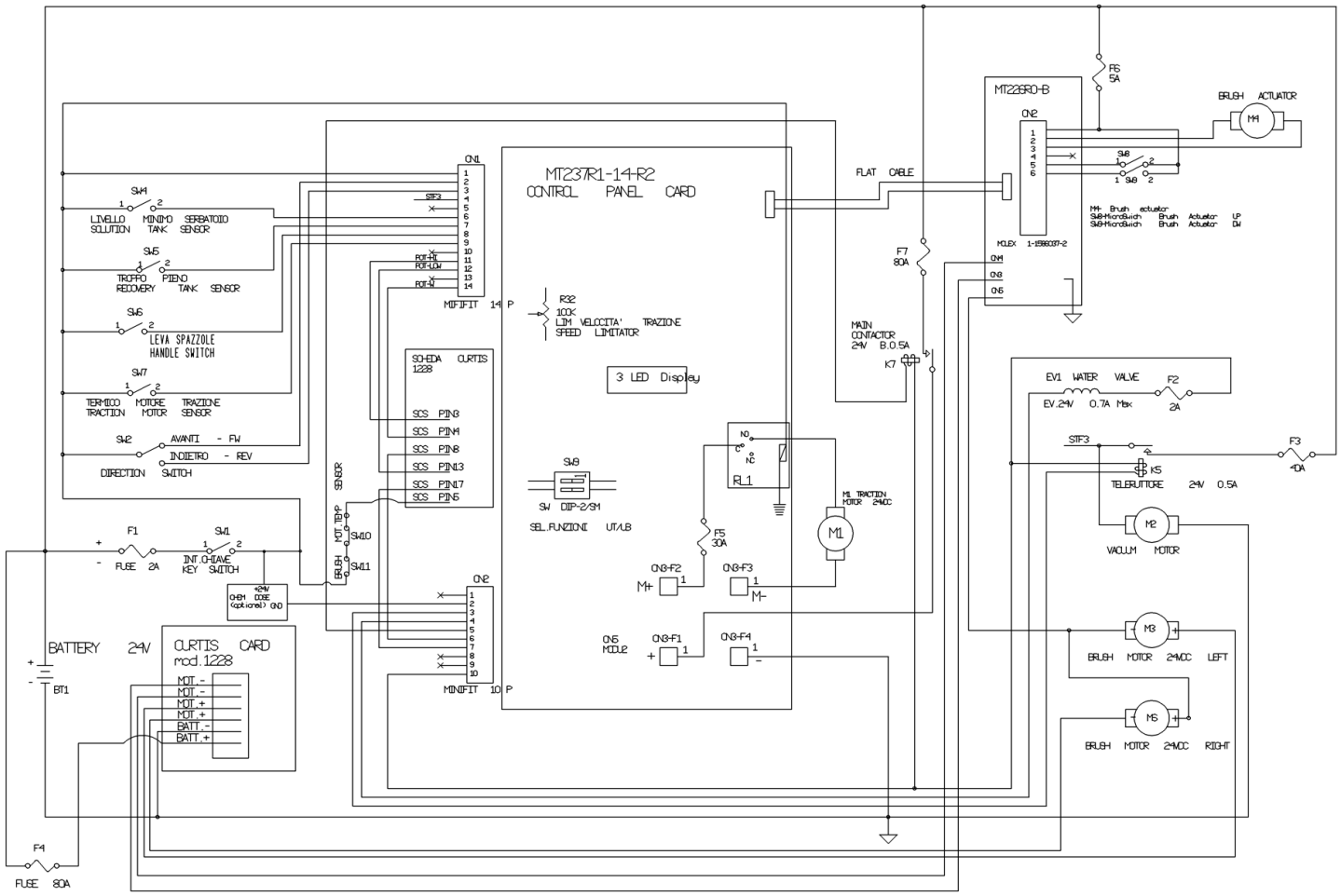

Ref.	K	Part N.	Customer Part N.	Description	Qty	Validity: From	To	Price
EV1		MEEV00018		SOLENOID VALVE	1,00			--
M1		MOCC00347		MOTOR 180W	1,00			--
M2		MOCC00342		VACUUM CLEANER 24V	1,00			--
M3		MOCC00382		MOTOR -	2,00			--
M4		MOCC00383		ATUATOR CT70 ECS	1,00			--
M5		MOCC00382		MOTOR -	1,00			--

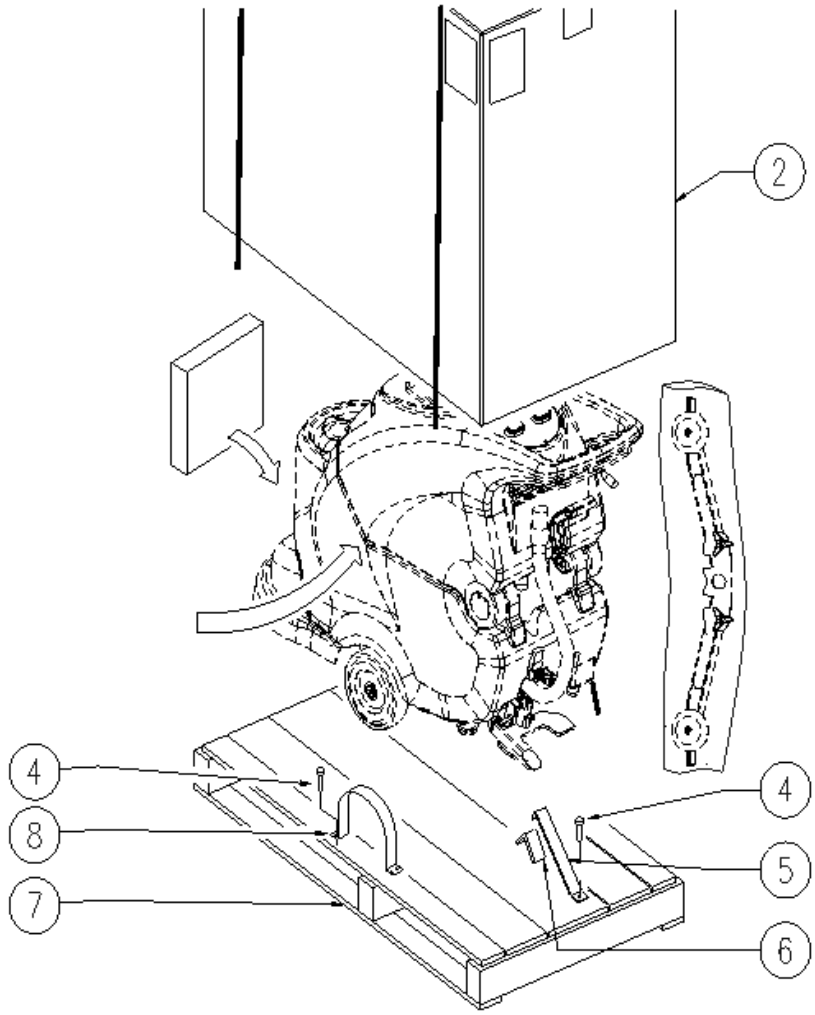

Ref.	K	Part N.	Customer Part N.	Description		Qty	Validity: From	To	Price
0002		MICT00197		BOX		1,00			--
0004		VTVT00043		SCREW	AUTOF.LEGNO 4,5X25 TS BR	9,00			--
0005		MIVR00137		CLAMP	RUOTA POSTERIORE X IMBAL.	1,00			--
0006		GUGO00009		MOUSSE		0,05			--
0007		MIBA00011		PALLET		1,00			--
0008		MIVR00135		CLAMP	RUOTA POSTERIORE X IMBAL.	2,00			--

Table: SOLENOID VALVE

Progressive Number: 1

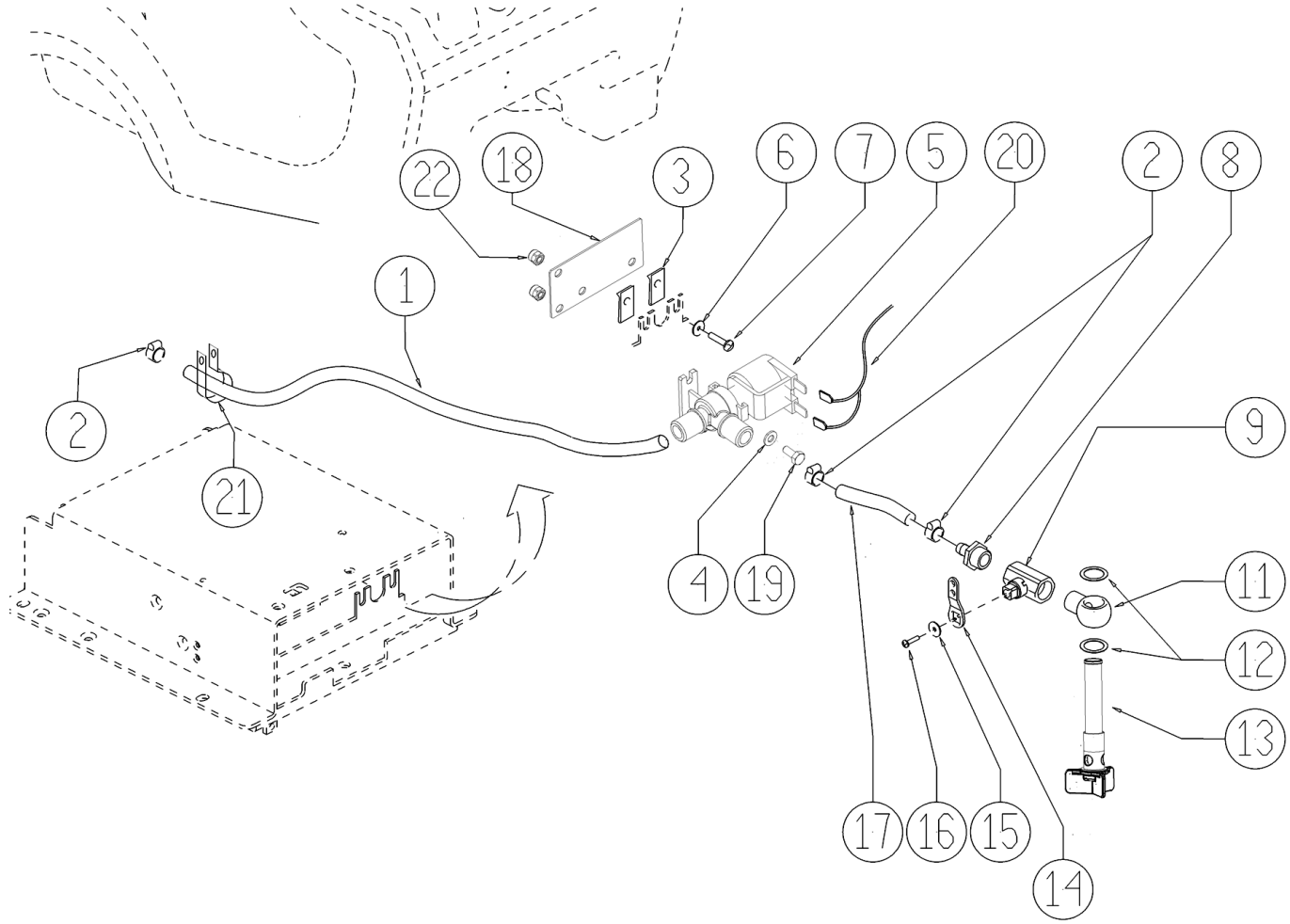

Ref.	K	Part N.	Customer Part N.	Description	Qty	Validity: From	To	Price
0001		TBFX48011		TUBE FLEX D.12X3 ARMORV.PVC TR	0,78			--
0002		FSVR00428		CLAMP D. 12-20	4,00			--
0003		MLML00002		SPRING PRESTOLA DOPPIA 8P	2,00		05/2011	--
0004		VTRS00515		WASHER D. 4 INX	2,00			--
0005		MEEV00036		SOLENOID VALVE HOLE 8mm CLEANTIME	1,00			--
0006		VTRS00516		WASHER D. 5 INX	2,00		05/2011	--
0007		VTVT48694		SCREW TCB TC 5 X12 UNI 9707 TZ	2,00		05/2011	--
0008		RCVR00536		CONNECTOR PORTAG.	1,00		09/2011	--
0009		LAFN07783		CONNECTOR -	1,00	09/2011		--
0009		RCGR00065		TAP F/F 1/2"	1,00		09/2011	--
0011		RCDS49622		CONNECTOR OCC 1/2 - 1/2M	1,00		09/2011	--
0012		VTRS00567		WASHER 1/2	2,00			--
0013		MPVR05221		FILTER COMPLETO	1,00			--
0014		LAFN05902		LEVER RUBINETTO	1,00		09/2011	--
0015		VTRS00251		WASHER 4-16 INOX A2	1,00		09/2011	--
0016		VTVT01316		SCREW TC+ M3-16	1,00		09/2011	--
0017		TBFX48011		TUBE FLEX D.12X3 ARMORV.PVC TR	0,23	09/2011		--
0017		TBFX49468		TUBE FLEX D.10X3 ARMORV.PVC TR	0,17		09/2011	--
0018		LAFN08843		PLATE -	1,00		05/2011	--
0019		VTVT01158		SCREW M4x16	2,00	05/2011		--
0019		VTVT21096		SCREW TE M 4X 10 INX	2,00		05/2011	--
0020		MECB01234		WIRING	1,00			--
0021		FSVR00043		CLAMP d.16	1,00			--
0022		VTDD00055		NUT M 4 ATB A2	2,00		05/2011	--

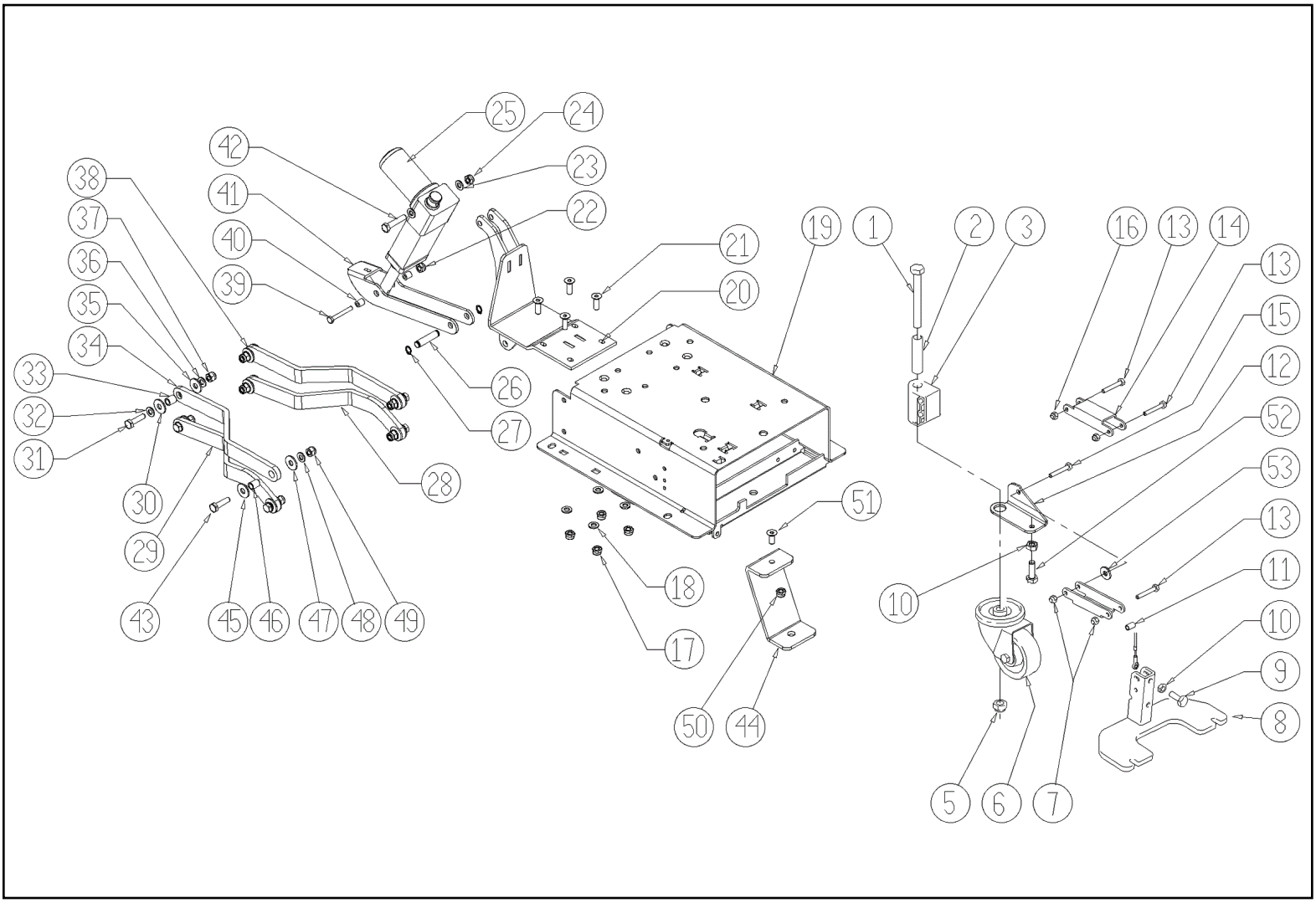

Ref.	K	Part N.	Customer Part N.	Description	Qty	Validity: From	To	Price
0001		VTVT24212		SCREW TE M 12X100 UNI 5737 INOX	1,00			--
0002		LAFN09006		PIN -	1,00			--
0003		MPVR04734		BLOCK TERGI	1,00			--
0005		VTDD00176		NUT M.12 INOX A2 BASSO AUTOB.	1,00			--
0006		RTRT00395		WHEEL CASTOR D.80X25 PU	1,00	08/2012		--
0006		RTRT00518		WHEEL CASTOR D.80X30	1,00		08/2012	--
0007		VTDD01694		NUT M6 INOX	4,00			--
0008		LAFN07560		PLATE -	1,00			--
0009		VTVT00410		SCREW TE M8x35 UNI5739 INOX	1,00			--
0010		VTDD15521		NUT M 8 INX A2 UNI 5588	1,00			--
0011		LAFN06898		SPACER 6-8 h15	1,00			--
0012		LAFN08999		BRACKET -	1,00			--
0013		VTVT01683		SCREW TE 6X40	4,00			--
0014		LAFN05853		LEVER ARM SOLLEVAMENTO TERGI	2,00			--
0015		VTVT01684		SCREW TE 6X45	1,00			--
0016		VTDD01694		NUT M6 INOX	4,00			--
0017		VTDD01695		NUT M 8 INX	4,00			--
0018		VTRS13947		WASHER D. 8 INX UNI 6592	4,00			--
0019		LAFN07606		BASE -	1,00			--
0020		LAFN07823		SUPPORT -	1,00			--
0021		VTVT01352		SCREW TSPEI M8X20	4,00			--
0022		VTDD01694		NUT M6 INOX	1,00			--
0023		VTRS13947		WASHER D. 8 INX UNI 6592	1,00			--
0024		VTDD01695		NUT M 8 INX	1,00			--
0025		MOCC00383		ATUATOR CT70 ECS	1,00			--
0026		LAFN51065		PIN INFER.ATTUAT.TEST.	1,00			--
0027		VTAE13511		CIRCLIP D. 10 UNI 7435	2,00			--
0028		LAFN07824		ARM -	1,00			--
0029		LAFN07825		ARM -	1,00			--
0030		VTRS15978		WASHER D.12X24 UNI 6592 INX	4,00			--
0031		VTVT13937		SCREW TE M 8X 30 INX UNI 5739	4,00			--
0032		VTRS13947		WASHER D. 8 INX UNI 6592	4,00			--
0033		LAFN04151		BUSHING X PARALLELOGRAMMA	4,00			--
0034		LAFN07827		ARM -	1,00			--
0035		VTRS15978		WASHER D.12X24 UNI 6592 INX	4,00			--
0036		VTRS13947		WASHER D. 8 INX UNI 6592	4,00			--
0037		VTDD01695		NUT M 8 INX	4,00			--
0038		LAFN07826		ARM -	1,00			--
0039		VTVT15142		SCREW TE M 6x45 INOX	1,00			--

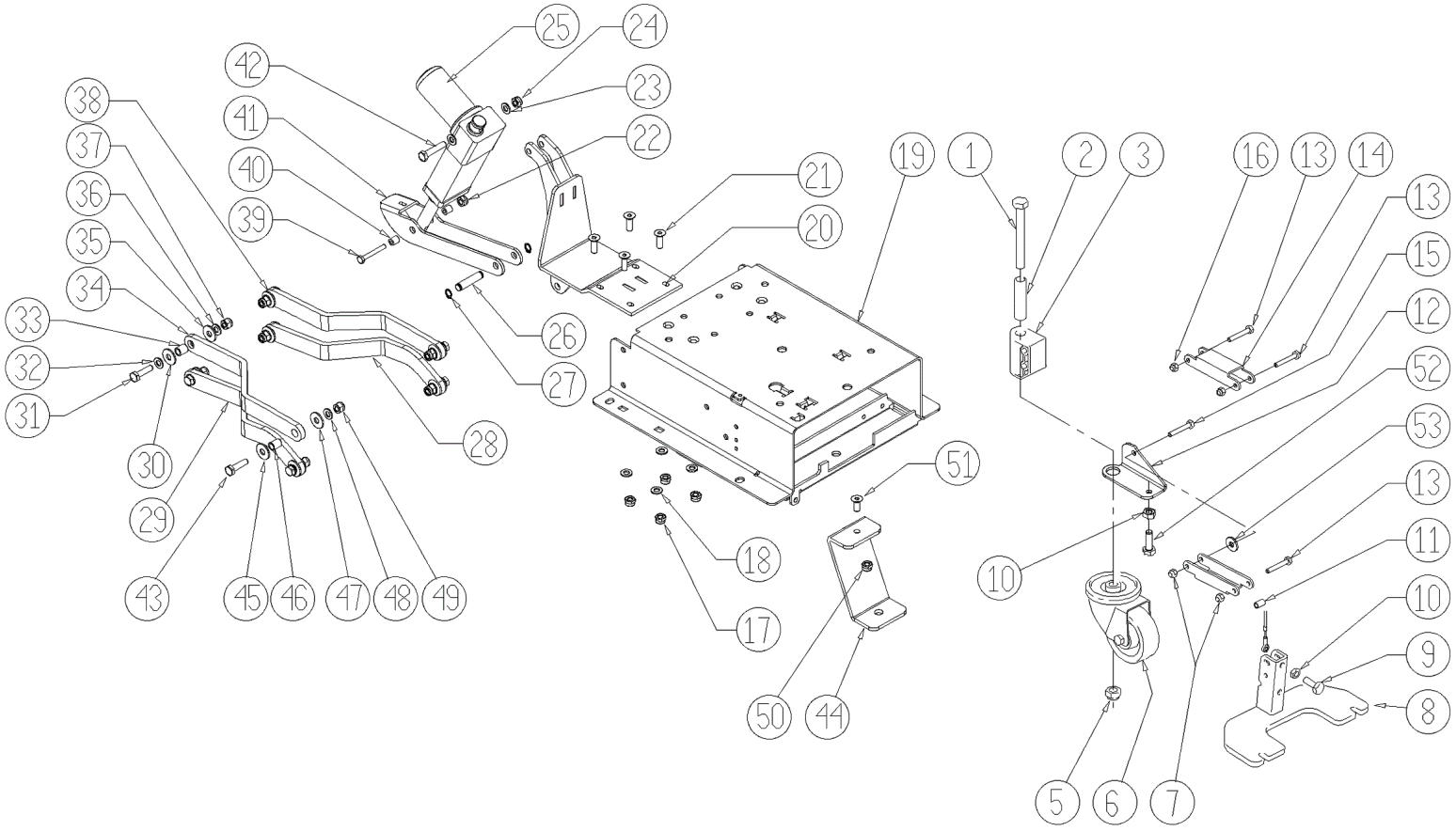

Ref.	K	Part N.	Customer Part N.	Description	Qty	Validity: From	To	Price
0040		LAFN04187		SPACER PER RIDUTTORE	2,00			--
0041		LAFN07828		ARM -	1,00			--
0042		VTVT15371		SCREW TE M 8X45 INOX A2 UNI	1,00			--
0043		VTVT01688		SCREW TBEI M 8X 30 ISO 7380 IX	4,00			--
0044		LAFN06860		BRACKET CT70	1,00			--
0045		VTRS15978		WASHER D.12X24 UNI 6592 INX	4,00			--
0046		LAFN04151		BUSHING X PARALLELOGRAMMA	4,00			--
0047		VTRS15978		WASHER D.12X24 UNI 6592 INX	4,00			--
0048		VTRS13946		WASHER D. 8 X24 INX UNI 6593	4,00			--
0049		VTDD01695		NUT M 8 INX	4,00			--
0050		VTDD01695		NUT M 8 INX	1,00			--
0051		VTVT00224		SCREW	1,00			--
0052		VTVT13938		SCREW TE 8X20 UNI5739 INX	1,00			--
0053		VTRS13945		WASHER D. 6X18 INX UNI 6593	1,00			--

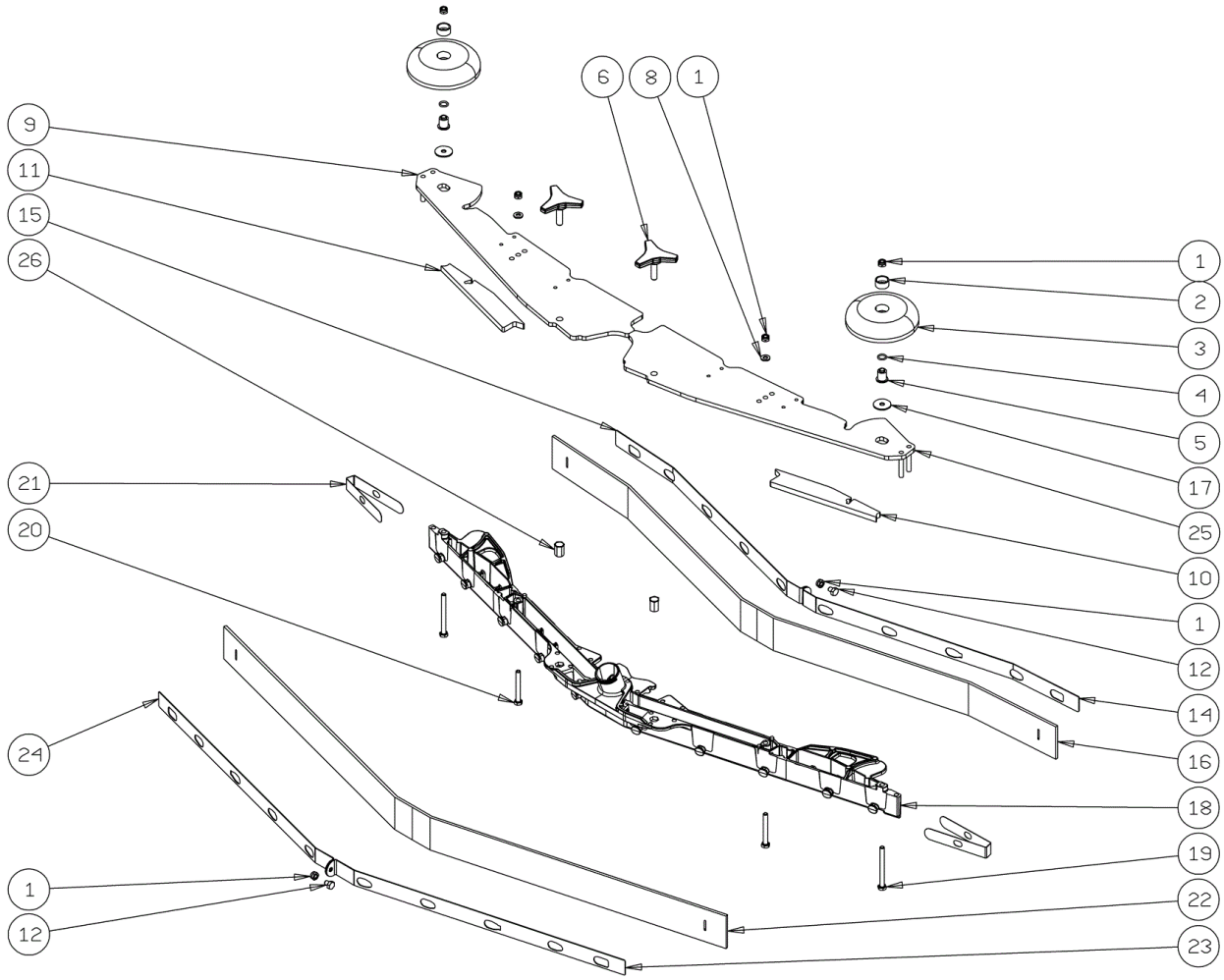

Ref.	K	Part N.	Customer Part N.	Description	Qty	Validity: From	To	Price
0001		VTDD01694		NUT M6 INOX	6,00			--
0002		MPVR49229		BUSHING SHK	2,00			--
0003		MPVR05290		ROLLER PARACOLPI	2,00			--
0004		GUGO00164		GASKET	2,00			--
0005		LAFN04100		SPACER PER RUOTINO PARACOLPI	2,00			--
0006		MPVR06003		KNOB AISI 304	2,00			--
0008		VTRS00245		WASHER D.6 UNI 6592 INOX	2,00			--
0009		LAFN09014		PLATE -	1,00			--
0010		GUVR00303		GASKET -	1,00			--
0011		GUVR00302		GASKET -	1,00			--
0012		VTVT01161		SCREW M6x8	2,00			--
0014		LAFN08952		BRACKET -	1,00			--
0015		LAFN08953		BRACKET -	1,00			--
0016		MPVR05804		RUBBER FRONT SQUEEGEE L PU	1,00			--
0017		VTRS16937		WASHER 6x24 INOX UNI 6593	2,00			--
0018		KTRI02049		BODY SQUEEGEE PRESSOFUSO "L"	1,00			--
0019		VTVT00841		SCREW TE M 6X65 UNI 5739 INX	2,00			--
0020		VTVT15515		SCREW TE M 6X 50 INOX A2	2,00			--
0021		MPVR05898		CLOSURE L	2,00			--
0022		MPVR05806		RUBBER REAR SQUEEGEE L PU	1,00			--
0023		LAFN08954		BRACKET -	1,00			--
0024		LAFN08955		BRACKET -	1,00			--
0025		LAFN09015		PLATE -	1,00			--
0026		VTVR00565		INSERT -	2,00			--

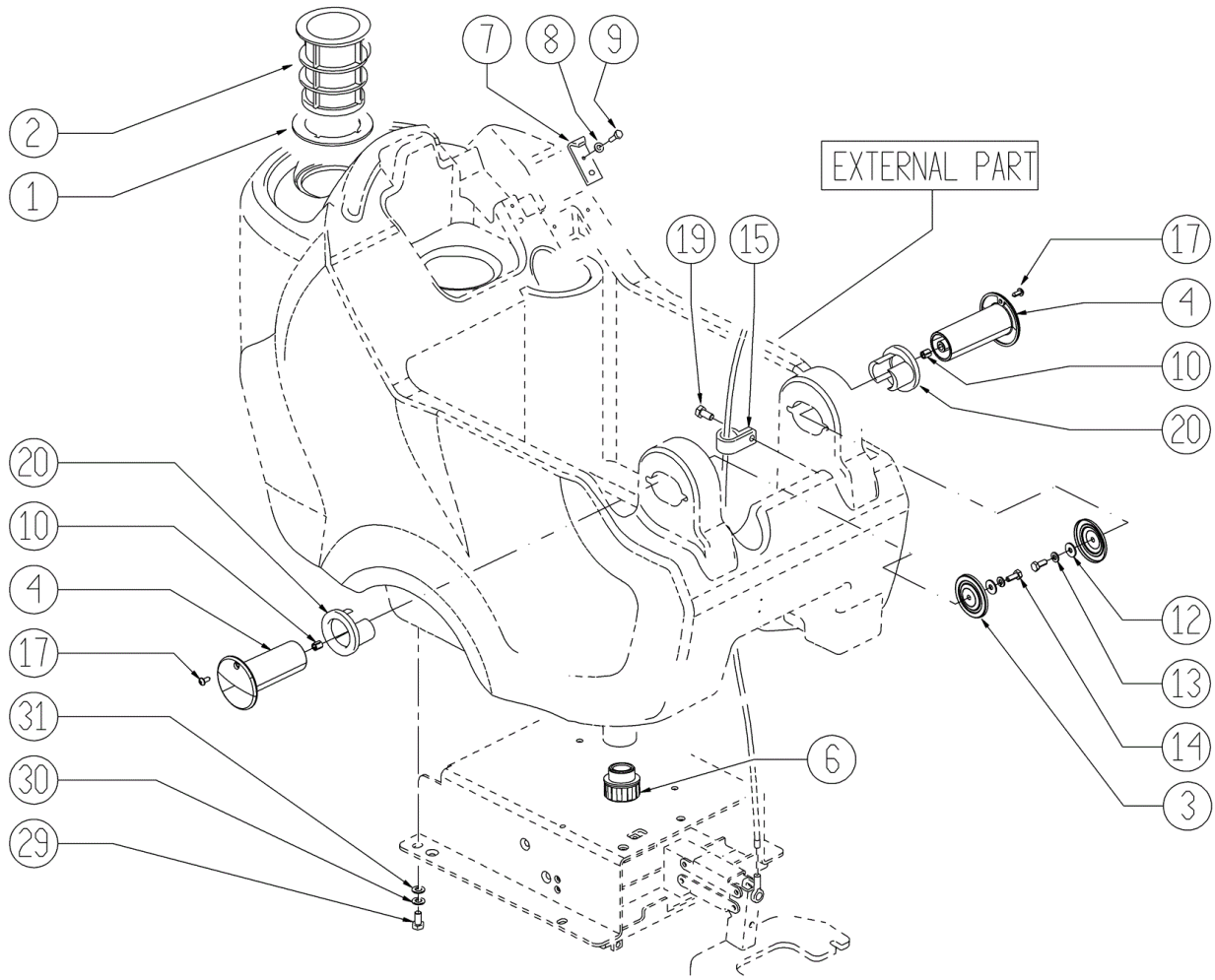

Ref.	K	Part N.	Customer Part N.	Description	Qty	Validity: From	To	Price
0001		GUGO00267		GASKET FILTRO	1,00			--
0002		FTAC00040		FILTER -	1,00			--
0003		LAFN07800		SHEET METAL PA.-	2,00			--
0004		MPVR48695		PIN SHK.BK	2,00			--
0006		MPVR08003		CAP	1,00			--
0007		LAFN06489		PLATE	1,00			--
0008		VTRS15144		WASHER D. 6 INX GRW UNI 1751	1,00			--
0009		VTVT01303		SCREW TE M6-10 INOX	1,00			--
0010		VTVR48693		INSERT M6 D.9	2,00			--
0012		VTRS13945		WASHER D. 6X18 INX UNI 6593	2,00			--
0013		VTRS15144		WASHER D. 6 INX GRW UNI 1751	2,00			--
0014		VTVT15143		SCREW TE 6X16 UNI5739	2,00			--
0015		MPVR02933		DUCT LOCK D.9,5	2,00			--
0017		VTVT48694		SCREW TCB TC 5 X12 UNI 9707 TZ	2,00			--
0019		VTVT15961		SCREW M 5X 16 TCB TC UNI 7687	1,00			--
0020		PMVR02028		RUBBER GRUPPO MONTAGGIO	2,00			--
0029		VTVT15916		SCREW TE M 8X 16 UNI 5739 A2	4,00			--
0030		VTRS00269		WASHER D. 8 DIN 6798-A INX A2	4,00			--
0031		VTRS13947		WASHER D. 8 INX UNI 6592	4,00			--

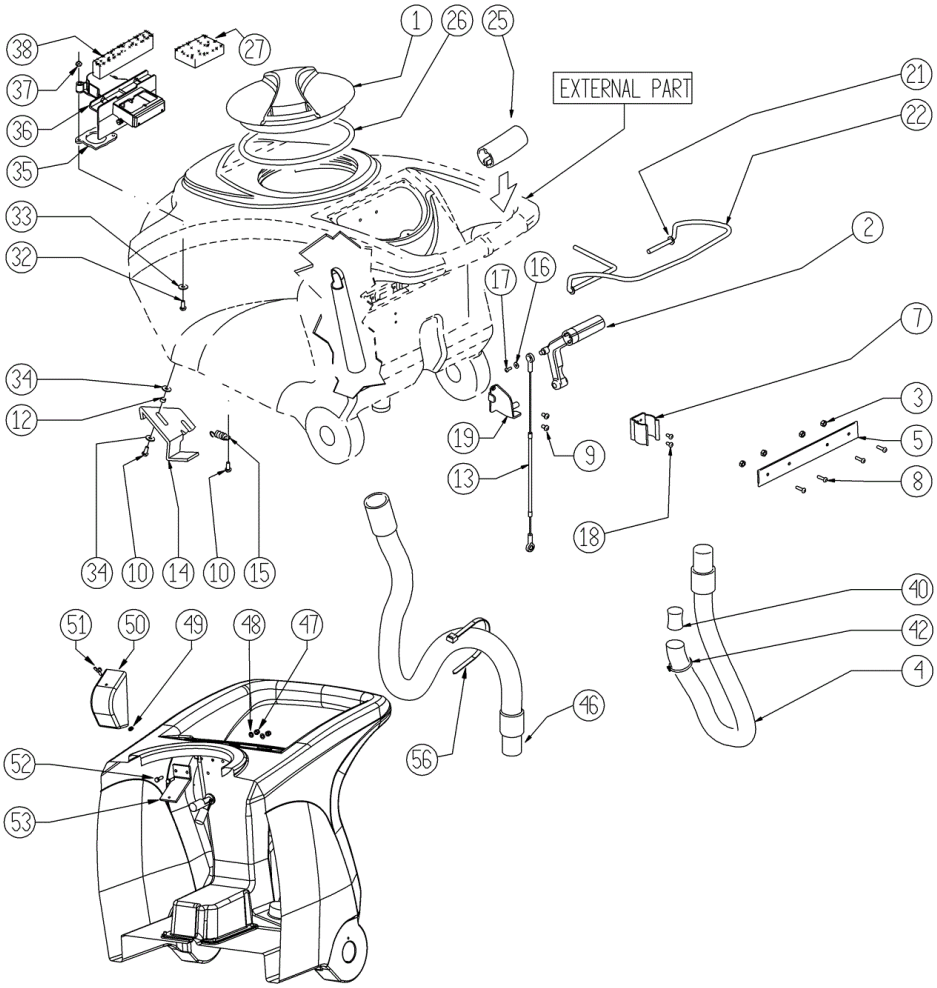

Ref.	K	Part N.	Customer Part N.	Description	Qty	Validity: From	To	Price
0001		MPVR04051		TANK CAP	1,00			--
0002		MPVR49942		LEVER SHK PP	1,00			--
0003		VTDD15518		NUT M 6 INX	4,00			--
0004		TBFX00348		TUBE CT40-70-90 HOSE DRAIN	1,00			--
0005		LAFN05865		PLATE COPRILEVA CONSENSO	1,00			--
0007		MPVR46988		CLIP LAV. SHK	1,00			--
0008		VTVT00651		SCREW TBEI M. 5x16 INOX	4,00			--
0009		VTVT15906		SCREW TE 6X 12 A2 UNI 5739	2,00			--
0010		VTVT15143		SCREW TE 6X16 UNI5739	3,00			--
0012		LAFN03626		SPACER	2,00			--
0013		CMCV00361		CABLE -	1,00			--
0014		LAFN06849		HANDLE CT 70	1,00			--
0015		MLML00203		SPRING	1,00			--
0016		VTRS00251		WASHER 4-16 INOX A2	1,00			--
0017		VTVT00800		SCREW TC 4X12 ZN	1,00			--
0018		VTVT21096		SCREW TE M 4X 10 INX	2,00			--
0019		LAFN05870		BRACKET LEVA SOLLEVAM. SQUEEGEE	1,00			--
0021		VTRS13947		WASHER D. 8 INX UNI 6592	2,00			--
0022		LAFN05861		LEVER CONSENSO SPAZZOLE	1,00			--
0025		MPVR05215		KNOB -	2,00			--
0026		GUGO00263		GASKET CIRCOLARE TAPPO	1,00			--
0027		FTDP00133		FILTER	1,00			--
0032		VTVT01139		SCREW TE M.4-25	2,00			--
0033		VTRS00515		WASHER D. 4 INX	2,00			--
0034		VTRS00274		WASHER NYLON 66 D.8,4-17-2 UNI	4,00			--
0035		GUGO00417		GASKET SCATOLA ASPIRAZIONE	1,00			--
0036		MPVR05482		BOX -	1,00			--
0037		VTDD15925		NUT M 4 INX	2,00			--
0038		GUGO00418		GASKET CONDOTTO ASPIRAZIONE	1,00			--
0040		GUGO00245		GASKET	1,00			--
0042		FSVR43136		CLAMP D. 35-40 DF.	1,00			--
0046		TBFX00353		TUBE PU CT70-CT90	1,00			--
0047		VTDD01693		NUT M 5 INX	2,00			--
0048		VTRS00516		WASHER D. 5 INX	2,00			--
0049		VTVR01038		WASHER -	1,00			--
0050		MPVR05596		PROTECTION -	1,00			--
0051		VTVT01150		SCREW 4x10	1,00			--
0052		VTVT07725		SCREW TE 5X16 UNI5739 INX	2,00			--
0053		LAFN07631		BRACKET -	1,00			--

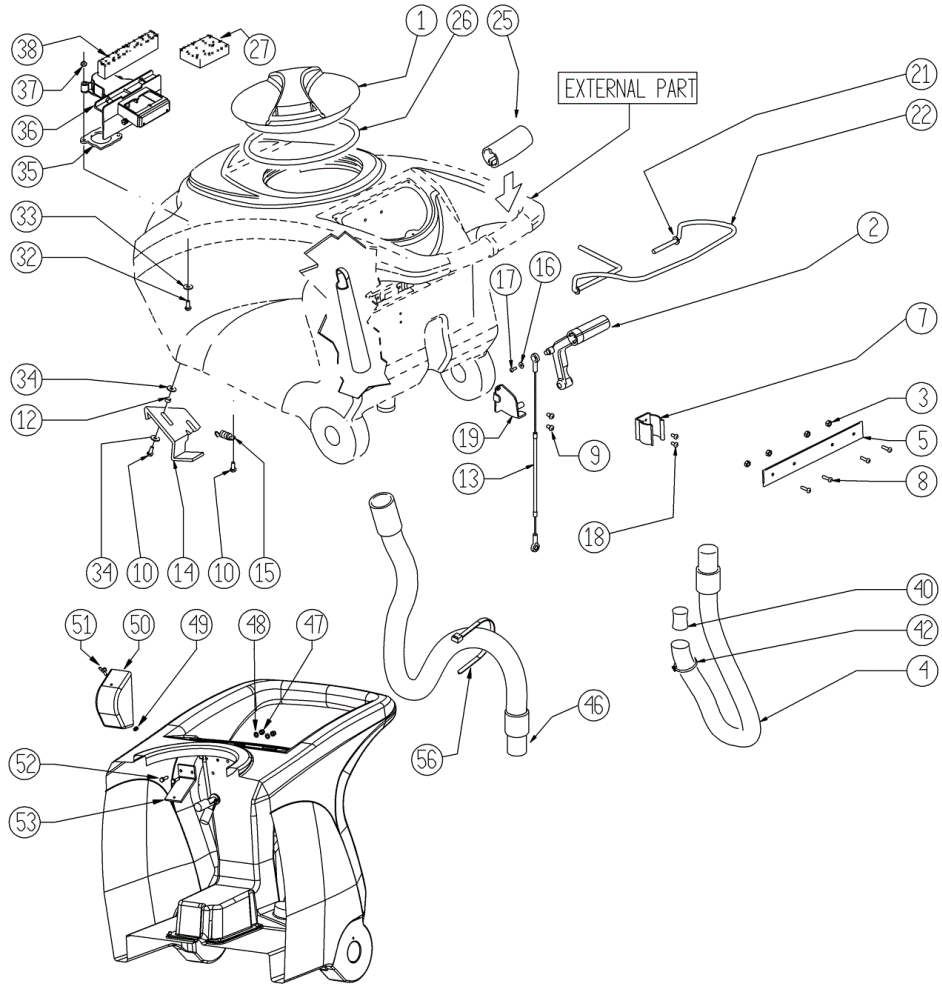

Ref.	K	Part N.	Customer Part N.	Description	Qty	Validity: From	To	Price
0056		FSVR00248		CLAMP -	1,00			--